Modular Signal Towers / Accessories

Tube D25mm 600mm long SR



Part No.: 975.840.60

MECHANICAL DATA	
Height	600 mm
Diameter	25 mm
Materials	Aluminium
Housing colour	Silver
Weight with packaging	166 g
Product weight	166 g

APPROVAL DATA	
Conforms with CE	No
Conforms with RoHS directive	Fulfills substance restriction
WEEE	No
Conforms with ATEX-directive	No
Conforms with CCC	No
Conforms with UL	No
Conforms with FCC	No
Conforms with ISED	No
EAC certificate available	No
Conforms with UKCA (Importer)	No
Conforms with AS-I	No
ICAO Certification	No
Conforms with DNV	No
Conforms with RoHS CN	No

! For additional installation and mounting information, refer to the appropriate user guide at www.werma.com. This printed copy is for information only and is subject to alteration.

Modular Signal Towers / Accessories

Tube D25mm 600mm long SR

DRAWING

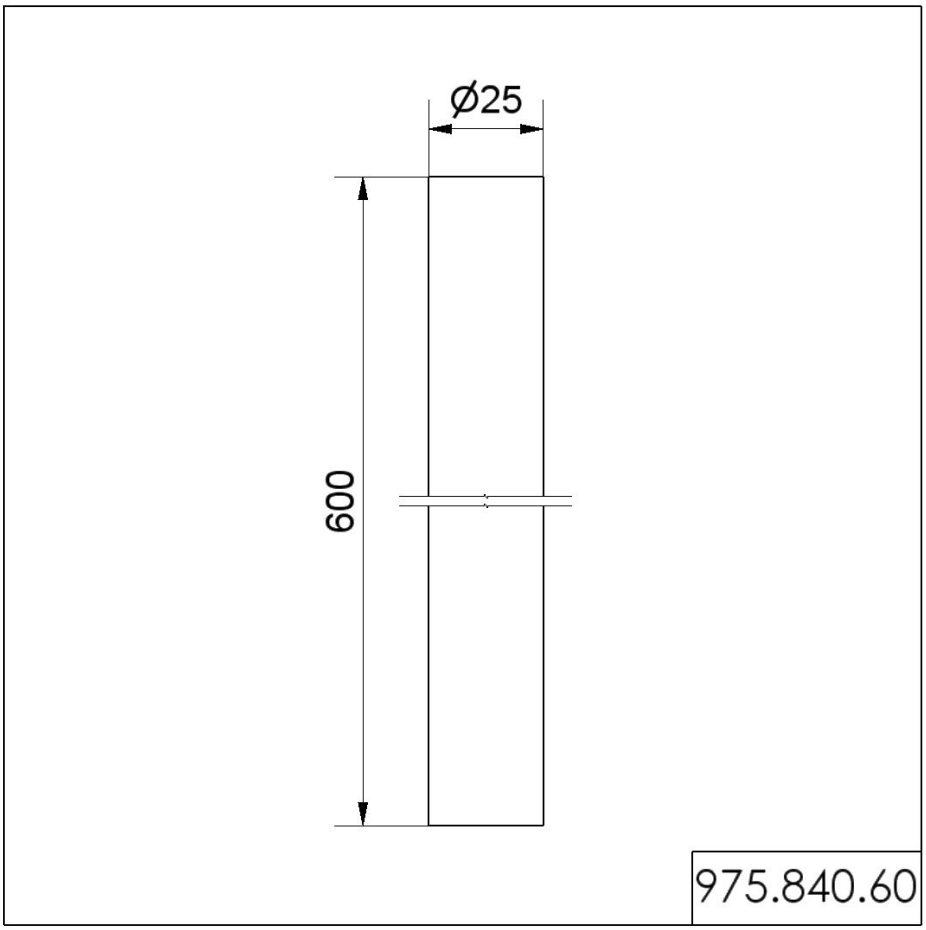

! For additional installation and mounting information, refer to the appropriate user guide at www.werma.com. This printed copy is for information only and is subject to alteration.