Permanent Light 800 / Accessories

# Tube D25mm 250mm long SR



| Part No.: | 975.840.25 |
|---|---|

| MECHANICAL DATA | |
|---|---|
| Height | 250 mm |
| Diameter | 25 mm |
| Materials | Aluminium |
| Housing colour | Silver |
| Weight with packaging | 76 g |
| Product weight | 73 g |

| APPROVAL DATA | |
|---|---|
| Conforms with CE | No |
| Conforms with RoHS directive | Fulfills substance restriction |
| WEEE | No |
| Conforms with ATEX-directive | No |
| Conforms with CCC | No |
| Conforms with UL | No |
| Conforms with FCC | No |
| Conforms with ISED | No |
| EAC certificate available | No |
| Conforms with UKCA (Importer) | No |
| Conforms with AS-I | No |
| ICAO Certification | No |
| Conforms with DNV | No |
| Conforms with RoHS CN | No |

! For additional installation and mounting information, refer to the appropriate user guide at www.werma.com. This printed copy is for information only and is subject to alteration.

Permanent Light 800 / Accessories

# Tube D25mm 250mm long SR

## DRAWING

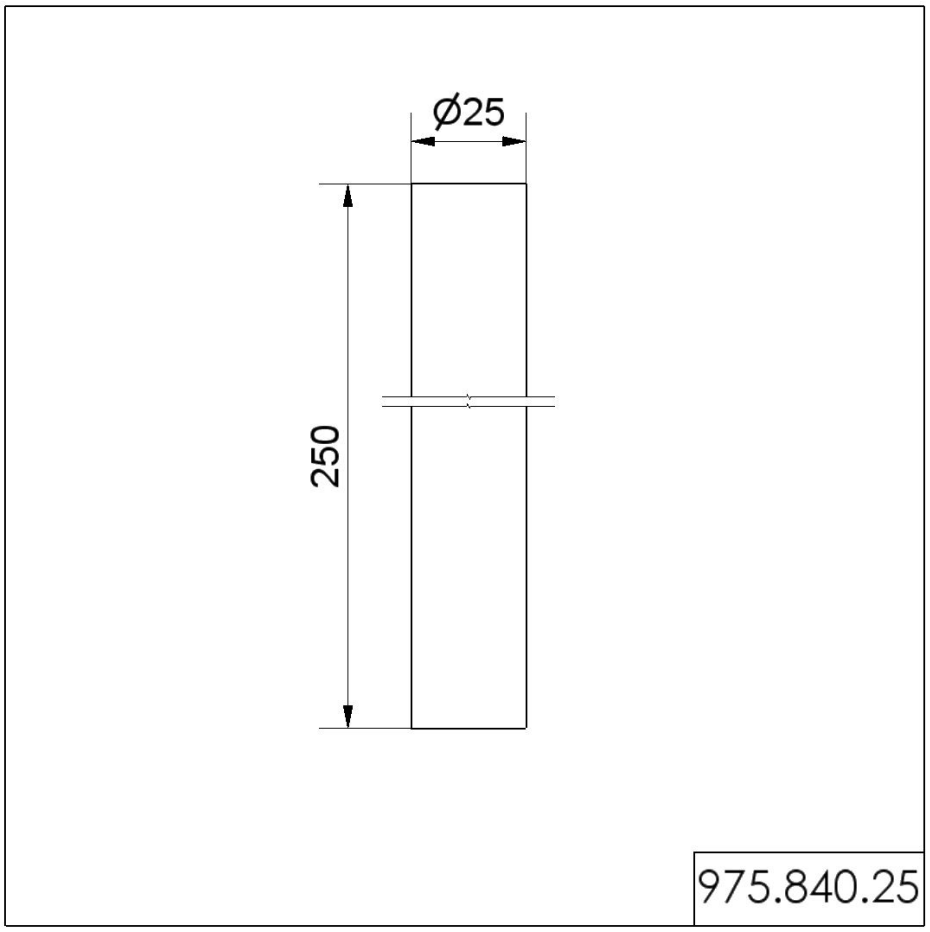


! For additional installation and mounting information, refer to the appropriate user guide at www.werma.com. This printed copy is for information only and is subject to alteration.