Permanent Light 826 / Accessories

Wire guard SR



Part No.:	975.826.03

MECHANICAL DATA	
Height	163 mm
Diameter	146 mm
Materials	Steel
Housing colour	Silver
Weight with packaging	140 g
Product weight	140 g

APPROVAL DATA	
Conforms with RoHS directive	Fulfills substance restriction
WEEE	No
Conforms with ATEX-directive	No
Conforms with CCC	No
Conforms with UL	No
Conforms with FCC	No
Conforms with ISED	No
EAC certificate available	No
Conforms with AS-I	No
ICAO Certification	No
Conforms with DNV	No
Conforms with RoHS CN	No

! For additional installation and mounting information, refer to the appropriate user guide at www.werma.com. This printed copy is for information only and is subject to alteration.

Permanent Light 826 / Accessories

Wire guard SR

DRAWING

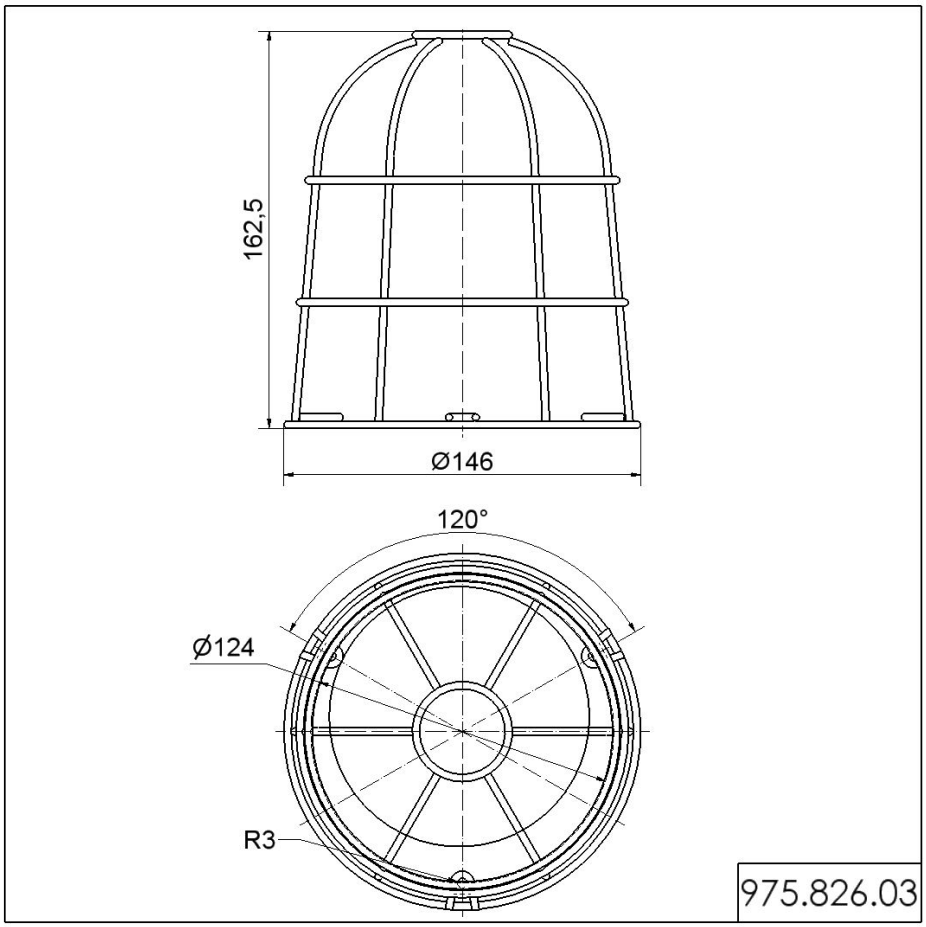

! For additional installation and mounting information, refer to the appropriate user guide at www.werma.com. This printed copy is for information only and is subject to alteration.