Electronic Buzzers Installation 109 / Accessories

Surface housing 3-fold GY



Part No.:	975.109.04

MECHANICAL DATA	
Length	266 mm
Width	80 mm
Height	60 mm
Materials	PC/ABS
Housing colour	Grey
Protection category	IP65
Weight with packaging	300 g
Product weight	300 g

APPROVAL DATA	
Conforms with RoHS directive	Fulfills substance restriction
WEEE	No
Conforms with ATEX-directive	No
Conforms with CCC	No
Conforms with UL	No
Conforms with FCC	No
Conforms with ISED	No
EAC certificate available	No
Conforms with UKCA (Importer)	No
Conforms with CMIM	No
Conforms with AS-I	No
ICAO Certification	No
Conforms with DNV	No
Conforms with RoHS CN	No

! For additional installation and mounting information, refer to the appropriate user guide at www.werma.com. This printed copy is for information only and is subject to alteration.

Electronic Buzzers Installation 109 / Accessories

Surface housing 3-fold GY

DRAWING

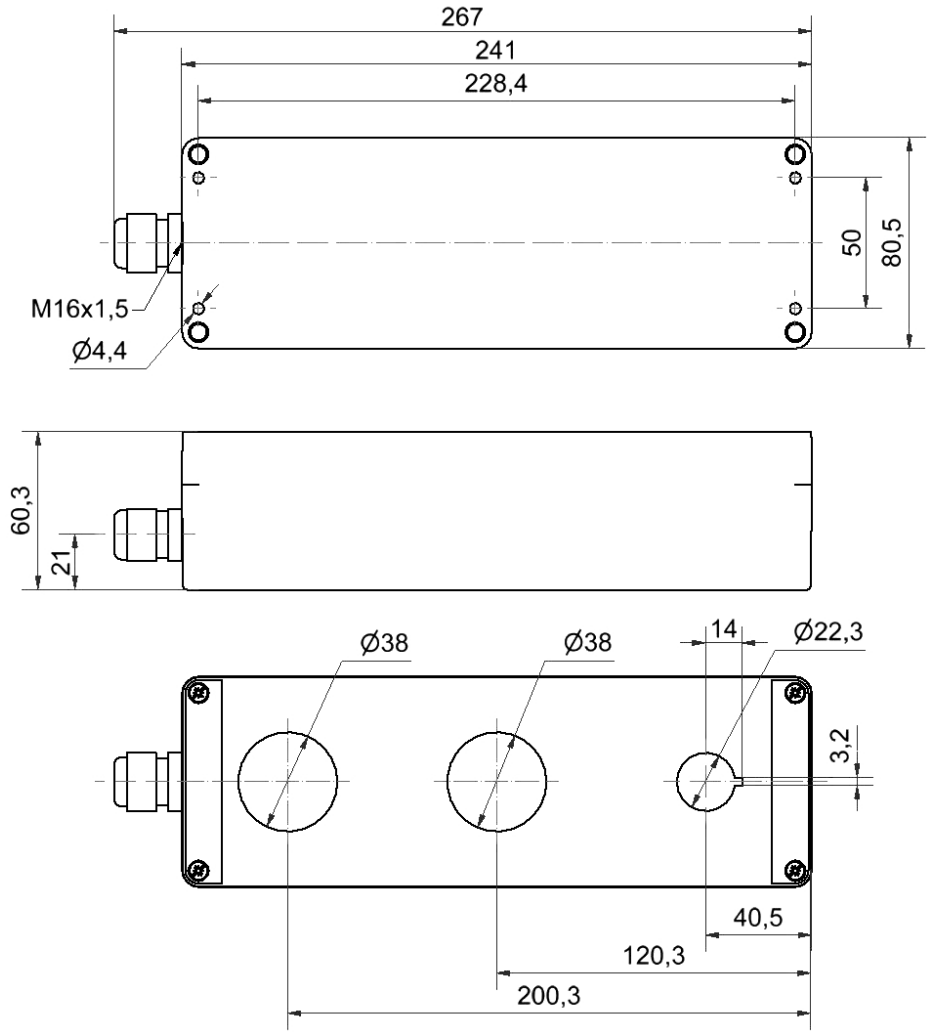

! For additional installation and mounting information, refer to the appropriate user guide at www.werma.com. This printed copy is for information only and is subject to alteration.