KombiSIGN 40 / Accessories

Bracket assembly on profiling WM BK



Part No.:	960.630.02

MECHANICAL DATA	
Length	70 mm
Width	41 mm
Height	57 mm
Materials	PC/ABS
Housing colour	Black
Protection category	IP66 IP69K
Cable entry minimum	d = 3 mm
Cable entry maximum	d = 6 mm
Weight with packaging	27 g
Product weight	27 g

APPROVAL DATA	
Conforms with CE	No
Conforms with RoHS directive	Fulfills substance restriction
WEEE	No
Conforms with ATEX-directive	No
Conforms with CCC	No
Conforms with UL	No
Conforms with FCC	No
Conforms with ISED	No
EAC certificate available	No
Conforms with UKCA (Importer)	No
Conforms with AS-I	No
ICAO Certification	No
Conforms with DNV	No
Conforms with RoHS CN	No

! For additional installation and mounting information, refer to the appropriate user guide at www.werma.com. This printed copy is for information only and is subject to alteration.

KombiSIGN 40 / Accessories

Bracket assembly on profiling WM BK

DRAWING

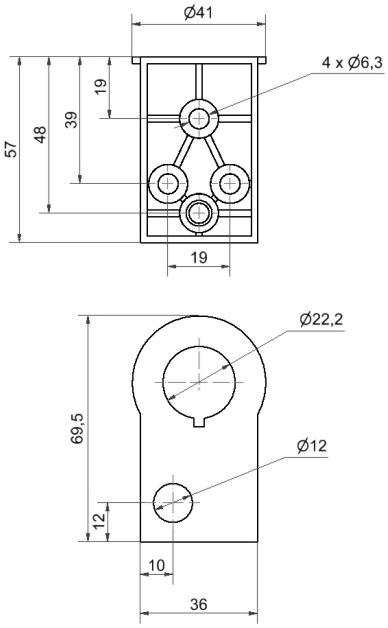

! For additional installation and mounting information, refer to the appropriate user guide at www.werma.com. This printed copy is for information only and is subject to alteration.