Systems for optimising production / Accessories

Bracket concealed cable entry GY



Part No.:	960.000.55

MECHANICAL DATA	
Length	99 mm
Width	79 mm
Height	44 mm
Diameter	71 mm
Materials	PA-GF
Housing colour	Grey
Weight with packaging	78 g
Product weight	78 g

APPROVAL DATA	
Conforms with CE	No
Conforms with RoHS directive	Fulfills substance restriction
WEEE	No
Conforms with ATEX-directive	No
Conforms with CCC	No
Conforms with UL	No
Conforms with FCC	No
Conforms with ISED	No
EAC certificate available	No
Conforms with UKCA (Importer)	No
Conforms with AS-I	No
ICAO Certification	No
Conforms with DNV	No
Conforms with RoHS CN	No

! For additional installation and mounting information, refer to the appropriate user guide at www.werma.com. This printed copy is for information only and is subject to alteration.

Systems for optimising production / Accessories

Bracket concealed cable entry GY

DRAWING

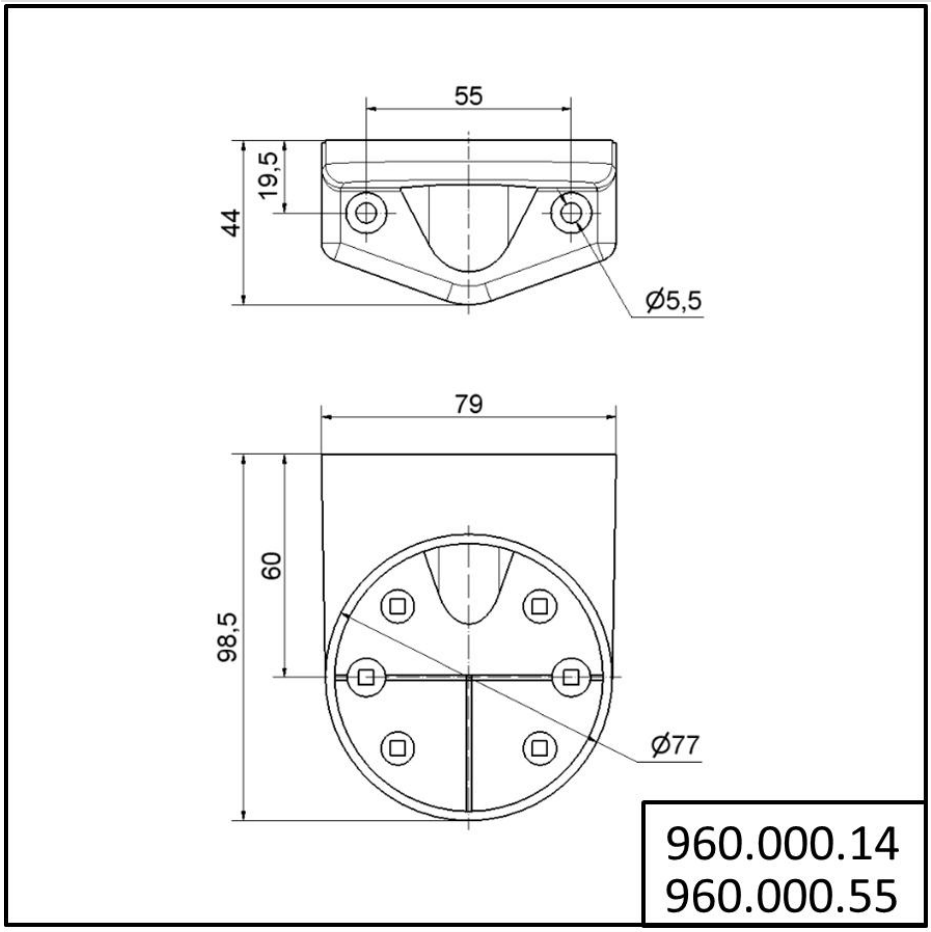

! For additional installation and mounting information, refer to the appropriate user guide at www.werma.com. This printed copy is for information only and is subject to alteration.