KombiSIGN 71 / Accessories

Fixing bracket WM BK

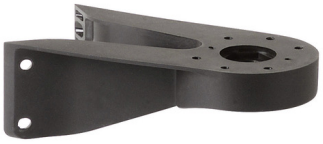

Part No.:	960.000.41

MECHANICAL DATA	
Length	149 mm
Width	80 mm
Height	50 mm
Materials	PA-GF
Housing colour	Black
Weight with packaging	90 g
Product weight	90 g

APPROVAL DATA	
Conforms with RoHS directive	Fulfills substance restriction
WEEE	No
Conforms with ATEX-directive	No
Conforms with CCC	No
Conforms with UL	No
Conforms with FCC	No
Conforms with ISED	No
EAC certificate available	No
Conforms with AS-I	No
ICAO Certification	No
Conforms with DNV	No
Conforms with RoHS CN	No

! For additional installation and mounting information, refer to the appropriate user guide at www.werma.com. This printed copy is for information only and is subject to alteration.

KombiSIGN 71 / Accessories

Fixing bracket WM BK

DRAWING

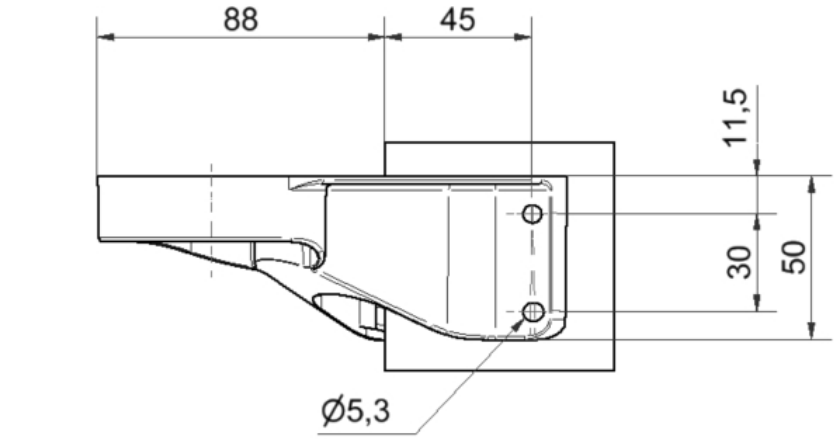

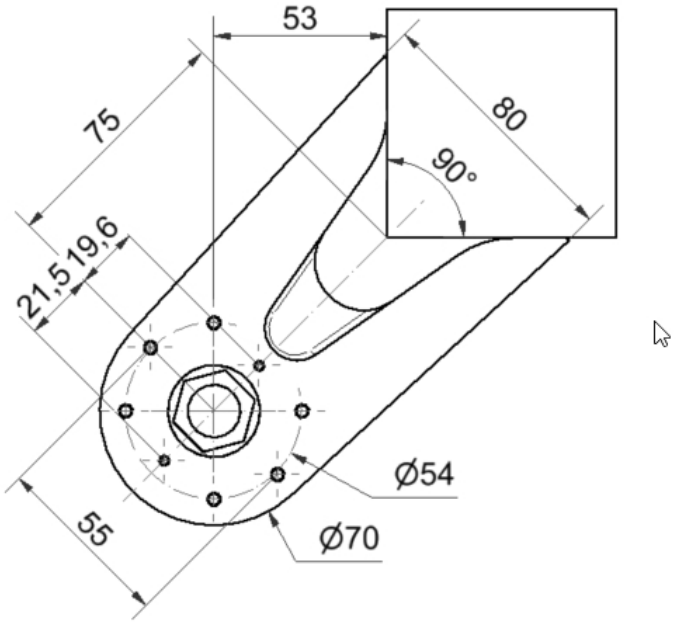

! For additional installation and mounting information, refer to the appropriate user guide at www.werma.com. This printed copy is for information only and is subject to alteration.