Modular Signal Towers / Accessories

Foldable base BK



Part No.:	960.000.30

MECHANICAL DATA	
Length	77 mm
Width	71 mm
Height	117 mm
Diameter	70 mm
Materials	PA-GF
Housing colour	Black
Protection category	IP65
Type of fixing	Special version
Weight with packaging	195 g
Product weight	165 g

APPROVAL DATA	
Conforms with CE	No
Conforms with RoHS directive	Fulfills substance restriction
WEEE	No
Conforms with ATEX-directive	No
Conforms with CCC	No
Conforms with UL	No
Conforms with FCC	No
Conforms with ISED	No
EAC certificate available	No
Conforms with AS-I	No
ICAO Certification	No
Conforms with DNV	No
Conforms with RoHS CN	No

! For additional installation and mounting information, refer to the appropriate user guide at www.werma.com. This printed copy is for information only and is subject to alteration.

Modular Signal Towers / Accessories

Foldable base BK

DRAWING

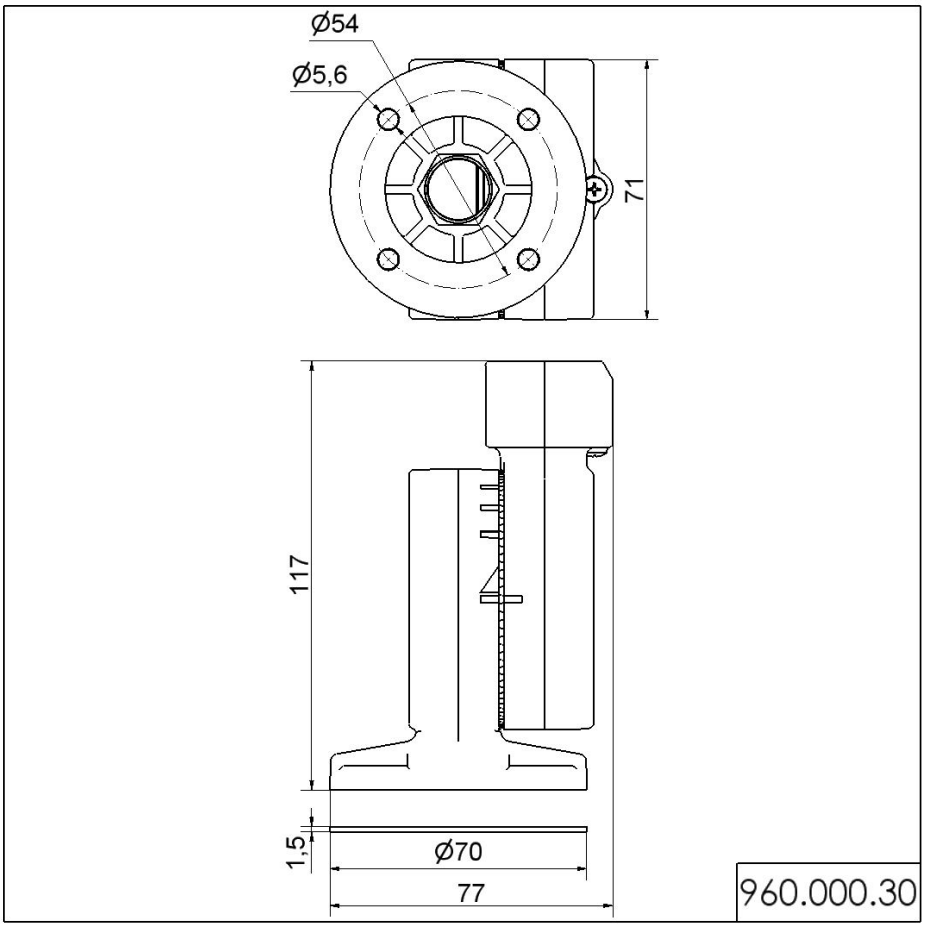

! For additional installation and mounting information, refer to the appropriate user guide at www.werma.com. This printed copy is for information only and is subject to alteration.