Midi free-standing Beacons / Double-Flash Light 897

Double Flash Beacon BWM 230VAC RD



Part No.: 897.100.68

MECHANICAL DATA	
Height	148 mm
Diameter	149 mm
Materials	PC PC/ABS
Dome colour	Red
Housing colour	Grey
Protection category	IP65
Connection	Screw terminals
cross-sectional area maximum	1,50mm² / 16AWG
Cable entry	Screwed cable gland
Cable entry minimum	d = 5 mm d = 6 mm
Cable entry maximum	d = 12 mm d = 7 mm
Tension relief	Present (conforms to VDE)
Type of fixing	Base mounting Wall mounting
Working temperature minimum	-30°C
Working temperature maximum	+50°C
Weight with packaging	611 g
Product weight	532 g

ELECTRICAL DATA	
Operating voltage	230V
Operating voltage type	AC
Operating voltage frequency	50Hz
Operating voltage tolerance	+/- 10%
Rated operational voltage	230 VAC
Rated operational current	200 mA
Protection class	Protection class 2
Pollution degree	3
Overvoltage category	II
insulation voltage	Ui = 250V / Uimp = 2500V

OPTICAL DATA	
Light source	Xenon
Light colour	Red
Optical signal image	Double flash
Flash frequency	1 Hz
Flash output	15 J

! For additional installation and mounting information, refer to the appropriate user guide at www.werma.com. This printed copy is for information only and is subject to alteration.

Midi free-standing Beacons / Double-Flash Light 897

Double Flash Beacon BWM 230VAC RD

Service life optical	4 million flashes maximum

APPROVAL DATA	
Conforms with CE	Yes
Conforms with RoHS directive	Yes
WEEE	Yes
Conforms with ATEX-directive	No
Conforms with CCC	No
Conforms with UL	No
Conforms with FCC	No
Conforms with ISED	No
EAC certificate available	No
Conforms with UKCA (Importer)	Yes (WERMA (UK) Ltd.)
Conforms with AS-I	No
ICAO Certification	No
Conforms with DNV	No
Conforms with RoHS CN	No
Conforms with VdS	No

! For additional installation and mounting information, refer to the appropriate user guide at www.werma.com. This printed copy is for information only and is subject to alteration.

Midi free-standing Beacons / Double-Flash Light 897

Double Flash Beacon BWM 230VAC RD

DRAWING

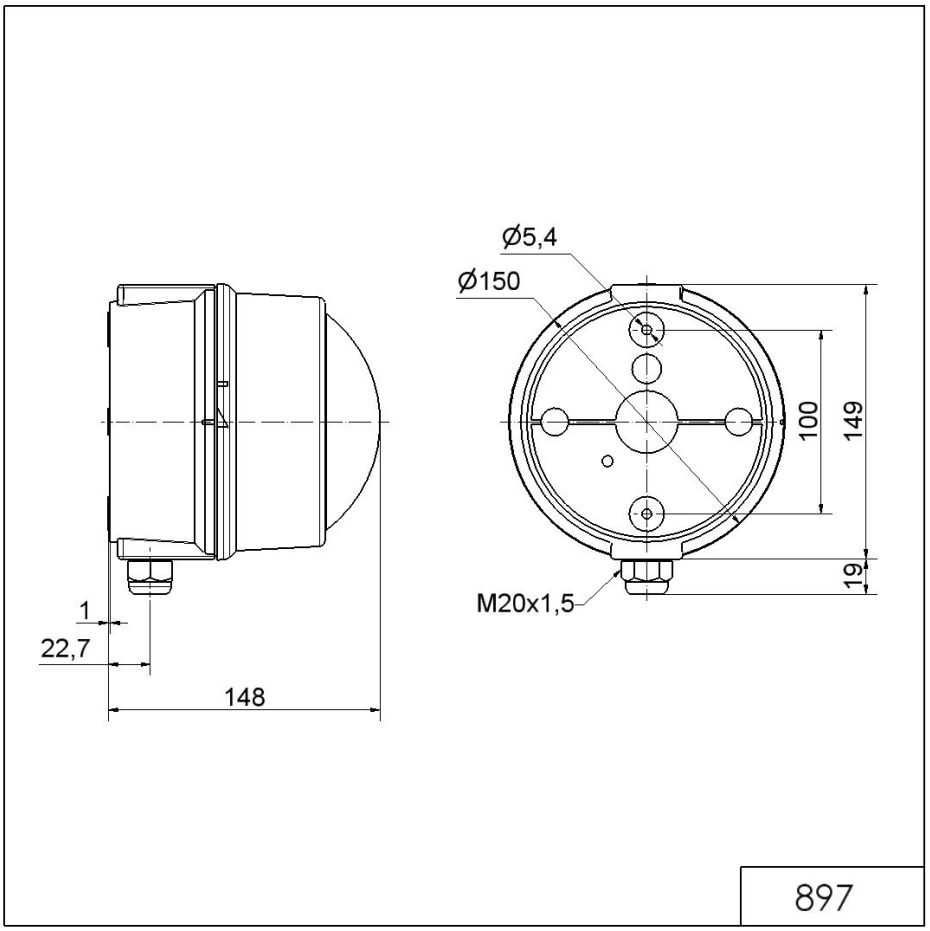

! For additional installation and mounting information, refer to the appropriate user guide at www.werma.com. This printed copy is for information only and is subject to alteration.