Traffic Lights / LED Light / LED Traffic Light 890

# LED Perm. Beacon WM 115-230VAC GN/YE/RD



**Part No.: 894.080.68**

| MECHANICAL DATA | |
|---|---|
| Height | 394 mm |
| Diameter | 85 mm |
| Materials | PC/ABS |
| Dome colour | Green<br>Red<br>Yellow |
| Housing colour | Grey |
| Protection category | IP65<br>IP69K |
| Connection | Screw terminals |
| cross-sectional area maximum | 1,50mm² / 16AWG |
| Cable entry | Membrane grommet |
| Cable entry minimum | d = 1 mm |
| Cable entry maximum | d = 13 mm |
| Type of fixing | Wall mounting |
| Working temperature minimum | -30°C |
| Working temperature maximum | +50°C |
| Weight with packaging | 720 g |
| Product weight | 627 g |

| ELECTRICAL DATA | |
|---|---|
| Operating voltage | 115-230V |
| Operating voltage type | AC |
| Operating voltage frequency | 50Hz at 230V<br>60Hz at 115V |
| Operating voltage tolerance | +/- 10% |
| Rated operational voltage | 230 VAC |
| Rated operational current | 130 mA |
| Rated inrush current | 2.000 mA |
| Protection class | Protection class 2 |
| Pollution degree | 3 |
| Overvoltage category | II |
| insulation voltage | Ui = 250V / Uimp = 2500V |

| OPTICAL DATA | |
|---|---|
| Light source | LED |
| Light colour | Green<br>Red<br>Yellow |
| Optical signal image | Permanent |

! For additional installation and mounting information, refer to the appropriate user guide at www.werma.com. This printed copy is for information only and is subject to alteration.

Traffic Lights / LED Light / LED Traffic Light 890

# LED Perm. Beacon WM 115-230VAC GN/YE/RD

| | |
|---|---|
| Service life optical | 50,000 h maximum |

| **APPROVAL DATA** | |
|---|---|
| Conforms with CE | Yes |
| Conforms with RoHS directive | Yes |
| WEEE | Yes |
| Conforms with ATEX-directive | No |
| Conforms with CCC | Yes |
| Conforms with UL | No |
| Conforms with FCC | No |
| Conforms with ISED | No |
| EAC certificate available | No |
| Conforms with UKCA (Importer) | Yes (WERMA (UK) Ltd.) |
| Conforms with AS-I | No |
| ICAO Certification | No |
| Conforms with DNV | No |
| Conforms with RoHS CN | No |
| Conforms with VdS | No |

! For additional installation and mounting information, refer to the appropriate user guide at www.werma.com. This printed copy is for information only and is subject to alteration.

Traffic Lights / LED Light / LED Traffic Light 890

# LED Perm. Beacon WM 115-230VAC GN/YE/RD

## DRAWING

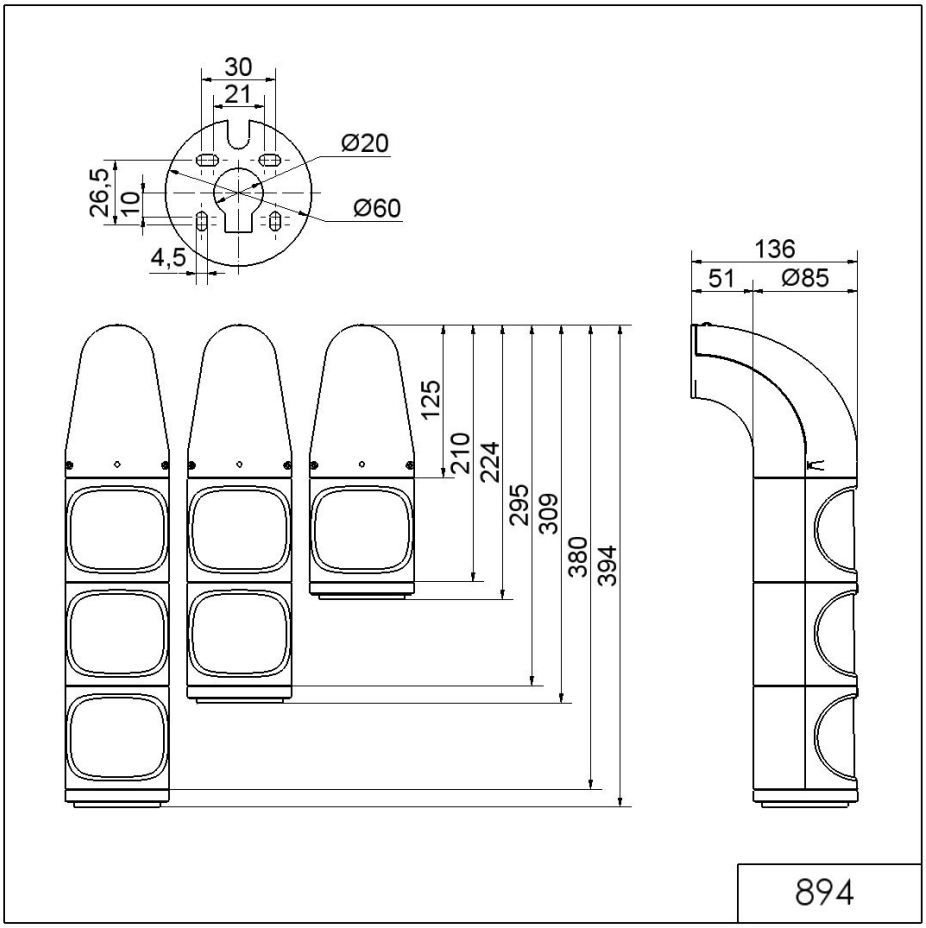


! For additional installation and mounting information, refer to the appropriate user guide at www.werma.com. This printed copy is for information only and is subject to alteration.