Traffic Lights / LED Light / LED Traffic Light 890

LED Traffic Light 24VDC RD/GN



Part No.:	890.030.55

MECHANICAL DATA	
Length	154 mm
Height	349 mm
Diameter	150 mm
Materials	PC PC/ABS
Dome colour	Green Red
Housing colour	Grey
Protection category	IP65
Connection	Push-in terminal
cross-sectional area minimum	0,75mm² / 19AWG
cross-sectional area maximum	1,50mm² / 16AWG
Cable entry	Screwed cable gland
Cable entry minimum	d = 5 mm
Cable entry maximum	d = 8 mm
Tension relief	Present (conforms to VDE)
Type of fixing	Base mounting Wall mounting
Working temperature minimum	-20°C
Working temperature maximum	+50°C
Weight with packaging	1241 g
Product weight	1109 g

ELECTRICAL DATA	
Operating voltage	24V
Operating voltage type	DC
Operating voltage tolerance	+/- 10%
Rated operational voltage	24 VDC
Protection class	Protection class 2
Pollution degree	3

OPTICAL DATA	
Light source	LED
Light colour	Green Red
Optical signal image	Permanent
Service life optical	50,000 h maximum

APPROVAL DATA	
Conforms with CE	No
Conforms with RoHS directive	Fulfills substance restriction

! For additional installation and mounting information, refer to the appropriate user guide at www.werma.com. This printed copy is for information only and is subject to alteration.

Traffic Lights / LED Light / LED Traffic Light 890

LED Traffic Light 24VDC RD/GN

WEEE	Yes
Conforms with ATEX-directive	No
Conforms with CCC	No
Conforms with UL	No
Conforms with FCC	No
Conforms with ISED	No
EAC certificate available	No
Conforms with AS-I	No
ICAO Certification	No
Conforms with DNV	No
Conforms with RoHS CN	No
Conforms with VdS	No

DRAWING

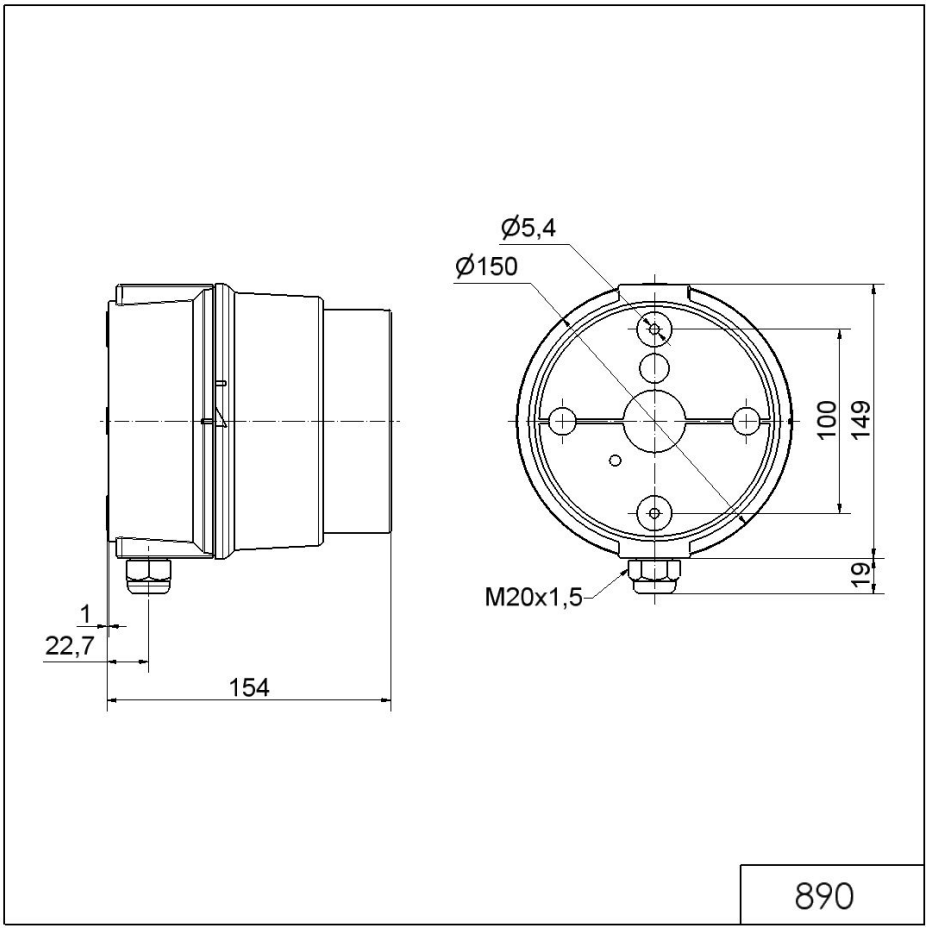

! For additional installation and mounting information, refer to the appropriate user guide at www.werma.com. This printed copy is for information only and is subject to alteration.