Signal Beacons and Traffic Lights / Traffic Lights

Traffic Light 12-230VAC/DC RD/GN



Part No.:	890.030.00

MECHANICAL DATA	
Length	154 mm
Height	349 mm
Diameter	150 mm
Materials	PC PC/ABS
Dome colour	Green Red
Housing colour	Grey
Protection category	IP65
Connection	Insulation-displacement contac
cross-sectional area minimum	0,75mm² / 19AWG
cross-sectional area maximum	1,50mm² / 16AWG
Cable entry	Screwed cable gland
Cable entry minimum	d = 5 mm
Cable entry maximum	d = 8 mm
Tension relief	Present (conforms to VDE)
Type of fixing	Base mounting Wall mounting
Working temperature minimum	-30°C
Working temperature maximum	+50°C
Weight with packaging	1204 g
Product weight	1067 g

ELECTRICAL DATA	
Operating voltage	12-230V
Operating voltage type	AC/DC
Protection class	Protection class 2
Pollution degree	3
Overvoltage category	II
insulation voltage	Ui = 250V / Uimp = 2500V
Power illuminant	max. 25W

OPTICAL DATA	
Light colour	Green Red
Service life optical	depends on bulb
Lamp fitting/socket	E27

APPROVAL DATA	
Conforms with CE	No
Conforms with RoHS directive	Fulfills substance restriction

! For additional installation and mounting information, refer to the appropriate user guide at www.werma.com. This printed copy is for information only and is subject to alteration.

Signal Beacons and Traffic Lights / Traffic Lights

Traffic Light 12-230VAC/DC RD/GN

WEEE	Yes
Conforms with ATEX-directive	No
Conforms with CCC	No
Conforms with UL	No
Conforms with FCC	No
Conforms with ISED	No
EAC certificate available	No
Conforms with AS-I	No
ICAO Certification	No
Conforms with DNV	No
Conforms with RoHS CN	No
Conforms with VdS	No

DRAWING

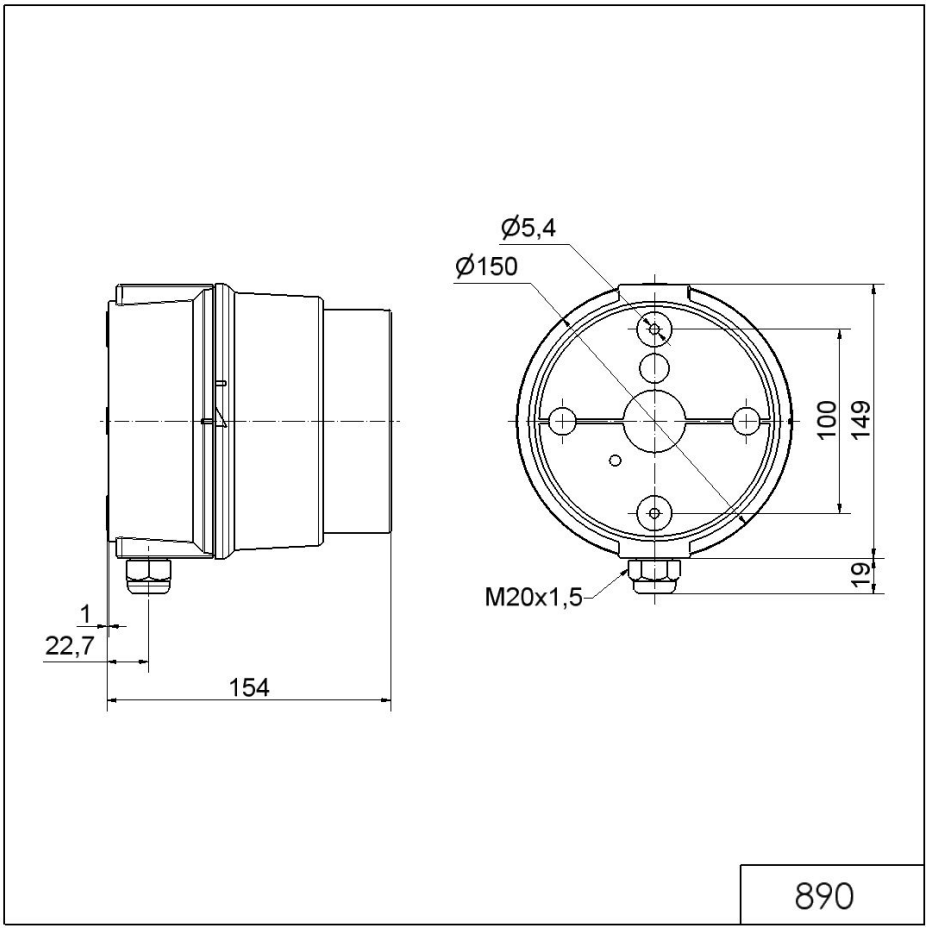

! For additional installation and mounting information, refer to the appropriate user guide at www.werma.com. This printed copy is for information only and is subject to alteration.