KombiSIGN 70 / Connection set 860

Connection Set BWM 115-230VAC BK



Part No.: 860.840.08

MECHANICAL DATA	
Height	62 mm
Diameter	136 mm
Materials	PA-GF PC/ABS
Housing colour	Black
Protection category	IP20
Connection	Special version
Tension relief	Pull-out protection
Type of fixing	Base mounting Wall mounting
Working temperature minimum	0°C
Working temperature maximum	+40°C
Weight with packaging	417 g
Product weight	360 g

ELECTRICAL DATA	
Operating voltage	115-230V
Operating voltage type	AC
Operating voltage frequency	50Hz at 230V 60Hz at 115V
Operating voltage tolerance	+/- 10%
Rated operational voltage	230 VAC
Rated operational current	1 mA
Protection class	Protection class 2
Pollution degree	2
Overvoltage category	II
insulation voltage	Ui = 250V / Uimp = 2500V

APPROVAL DATA	
Conforms with RoHS directive	Fulfills substance restriction
WEEE	Yes
Conforms with ATEX-directive	No
Conforms with CCC	No
Conforms with UL	No
Conforms with FCC	No
Conforms with ISED	No
EAC certificate available	No
Conforms with UKCA (Importer)	Yes (WERMA (UK) Ltd.)
Conforms with AS-I	No

! For additional installation and mounting information, refer to the appropriate user guide at www.werma.com. This printed copy is for information only and is subject to alteration.

KombiSIGN 70 / Connection set 860

Connection Set BWM 115-230VAC BK

ICAO Certification	No
Conforms with DNV	No
Conforms with RoHS CN	No
Conforms with VdS	No

DRAWING

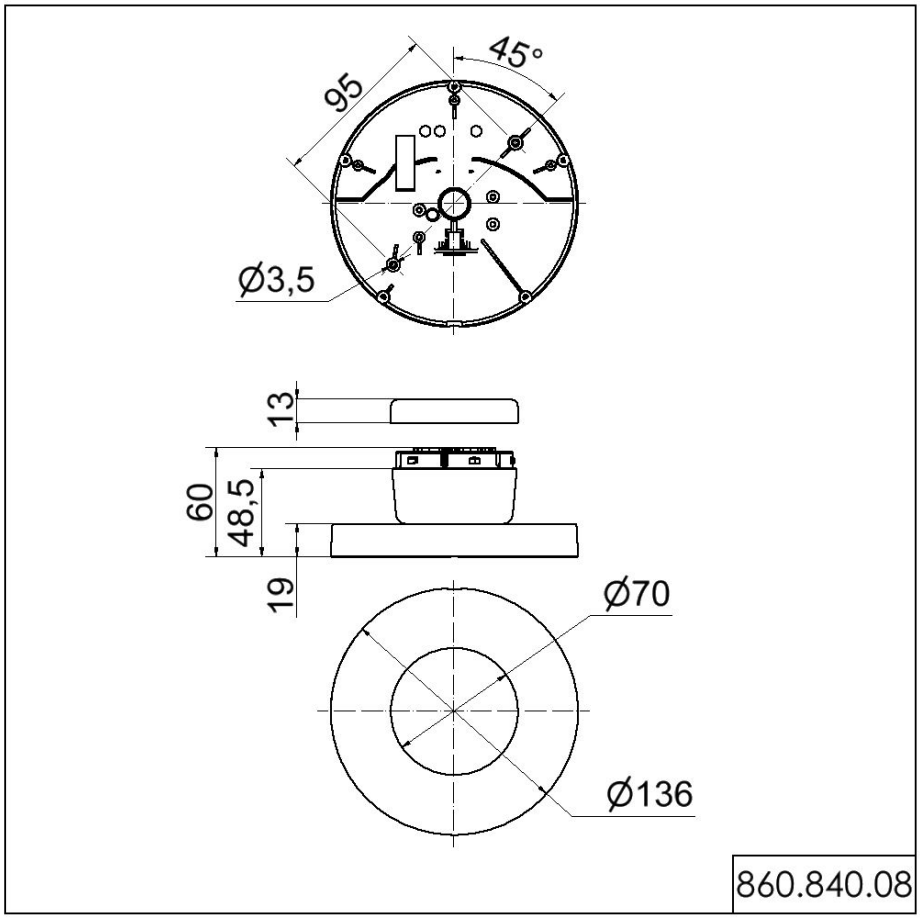

! For additional installation and mounting information, refer to the appropriate user guide at www.werma.com. This printed copy is for information only and is subject to alteration.