KombiSIGN 70 / AndonCONTROL 860

AndonCONTROL BWM 100-240VAC BK



Part No.: 860.840.07

MECHANICAL DATA	
Height	62 mm
Diameter	136 mm
Materials	PA-GF PC/ABS
Housing colour	Black
Protection category	IP20
Connection	Special version
Cable length	1800 mm
Tension relief	Pull-out protection
Type of fixing	Base mounting Wall mounting
Working temperature minimum	0°C
Working temperature maximum	+40°C
Weight with packaging	462 g
Product weight	402 g

ELECTRICAL DATA	
Operating voltage	115-230V
Operating voltage type	AC
Operating voltage frequency	50Hz at 230V 60Hz at 115V
Operating voltage tolerance	+/- 10%
Rated operational voltage	230 VAC
Rated operational current	1 mA
Protection class	Protection class 2
Pollution degree	3
Overvoltage category	II
insulation voltage	Ui = 250V / Uimp = 2500V

APPROVAL DATA	
Conforms with CE	Yes
Conforms with RoHS directive	Yes
WEEE	Yes
Conforms with ATEX-directive	No
Conforms with CCC	No
Conforms with UL	No
Conforms with FCC	No
Conforms with ISED	No
EAC certificate available	No

! For additional installation and mounting information, refer to the appropriate user guide at www.werma.com. This printed copy is for information only and is subject to alteration.

KombiSIGN 70 / AndonCONTROL 860

AndonCONTROL BWM 100-240VAC BK

Conforms with UKCA (Importer)	Yes (WERMA (UK) Ltd.)
Conforms with AS-I	No
ICAO Certification	No
Conforms with DNV	No
Conforms with RoHS CN	No
Conforms with VdS	No

DRAWING

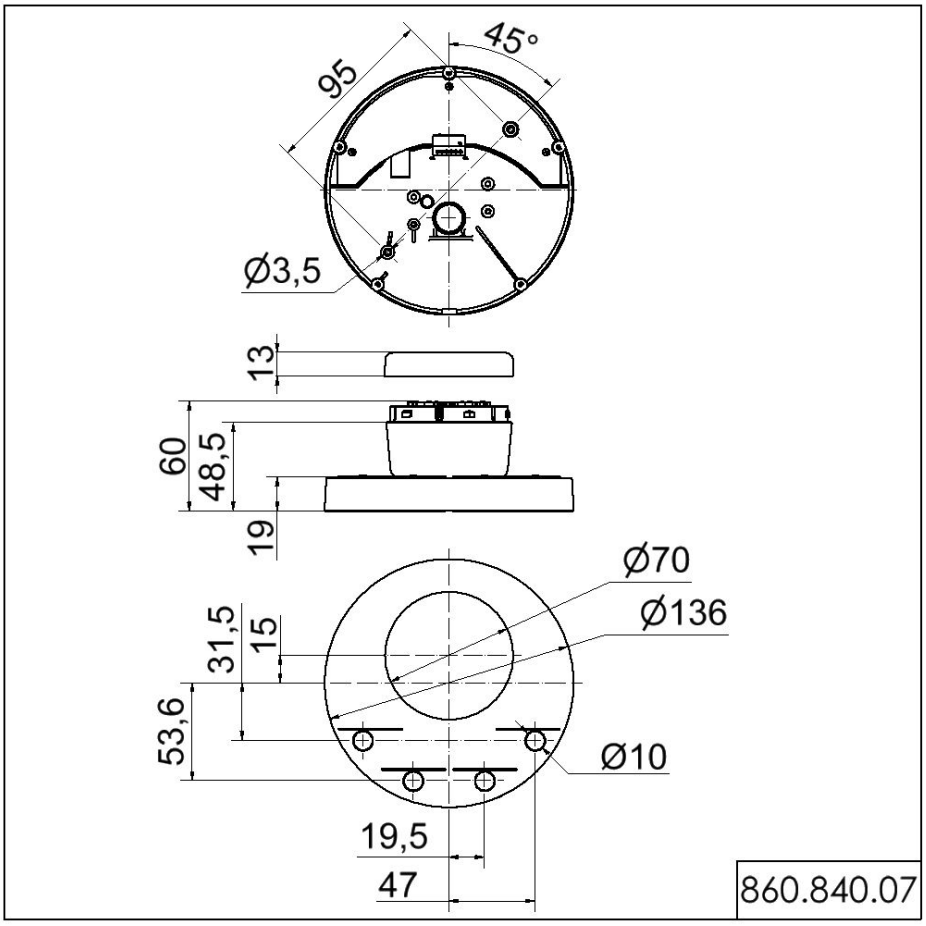

! For additional installation and mounting information, refer to the appropriate user guide at www.werma.com. This printed copy is for information only and is subject to alteration.