AndonWIRELESS / Andon product

Connection Set 115-230VAC BK KS71/72



Part No.: 860.640.09

MECHANICAL DATA	
Housing colour	Black
Protection category	IP20
Working temperature minimum	0°C
Working temperature maximum	+40°C
Weight with packaging	398 g
Product weight	330 g

ELECTRICAL DATA	
Operating voltage	115-230V
Operating voltage type	AC
Rated operational current	1 mA
Protection class	Protection class 2
Pollution degree	2
insulation voltage	Ui = 250V / Uimp = 2500V

APPROVAL DATA	
Conforms with CE	Yes
Conforms with RoHS directive	Yes
WEEE	Yes
Conforms with ATEX-directive	No
Conforms with CCC	No
Conforms with UL	No
Conforms with FCC	No
Conforms with ISED	No
EAC certificate available	No
Conforms with UKCA (Importer)	Yes (WERMA (UK) Ltd.)
Conforms with AS-I	No
Conforms with DNV	No
Conforms with RoHS CN	No
Conforms with VdS	No

! For additional installation and mounting information, refer to the appropriate user guide at www.werma.com. This printed copy is for information only and is subject to alteration.

AndonWIRELESS / Andon product

Connection Set 115-230VAC BK KS71/72

DRAWING

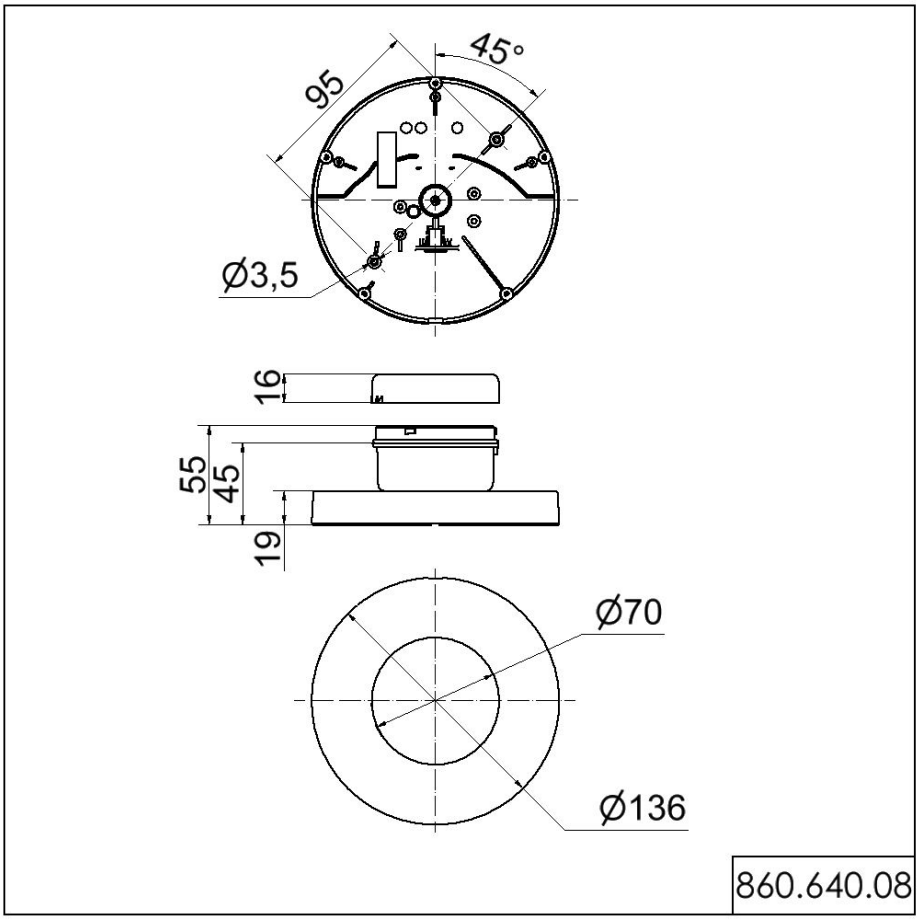

! For additional installation and mounting information, refer to the appropriate user guide at www.werma.com. This printed copy is for information only and is subject to alteration.