AndonSPEED / Andon product

Andon SmartBOX BWM 115-230VAC BK



Part No.: 860.000.09

MECHANICAL DATA	
Length	92 mm
Width	32 mm
Height	160 mm
Materials	PA-GF
Housing colour	Black
Protection category	IP30
Connection	Special version
cross-sectional area minimum	0,34mm² / 22AWG
cross-sectional area maximum	1,00mm² / 18AWG
Cable length	5000 mm
Tension relief	Present (conforms to VDE)
Type of fixing	Base mounting Wall mounting
Working temperature minimum	0°C
Working temperature maximum	+40°C
Weight with packaging	647 g
Product weight	570 g

ELECTRICAL DATA	
Operating voltage	115-230V
Operating voltage type	AC
Operating voltage frequency	50Hz at 230V 60Hz at 115V
Operating voltage tolerance	+/- 10%
Rated operational voltage	230 VAC
Rated operational current	1000 mA
Protection class	Protection class 2
Pollution degree	2
Overvoltage category	II
insulation voltage	Ui = 250V / Uimp = 2500V

OPTICAL DATA	
Service life optical	5,000 h maximum

APPROVAL DATA	
Conforms with CE	Yes
Conforms with RoHS directive	Yes
WEEE	Yes
Conforms with ATEX-directive	No
Conforms with CCC	No

! For additional installation and mounting information, refer to the appropriate user guide at www.werma.com. This printed copy is for information only and is subject to alteration.

AndonSPEED / Andon product

Andon SmartBOX BWM 115-230VAC BK

Conforms with UL	cRUus
Conforms with FCC	No
Conforms with ISED	No
EAC certificate available	No
Conforms with UKCA (Importer)	Yes (WERMA (UK) Ltd.)
Conforms with AS-I	No
ICAO Certification	No
Conforms with DNV	No
Conforms with RoHS CN	No
Conforms with VdS	No

DRAWING

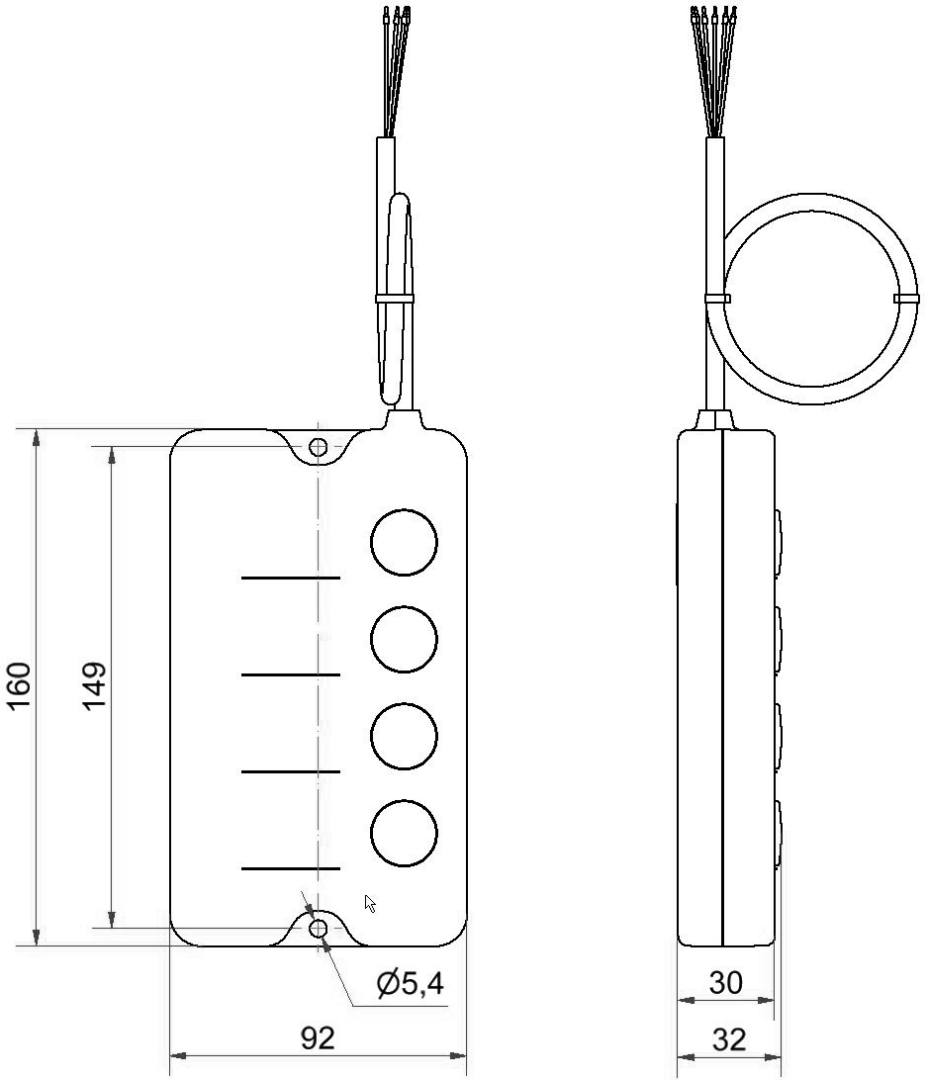

! For additional installation and mounting information, refer to the appropriate user guide at www.werma.com. This printed copy is for information only and is subject to alteration.