FlexSQUARE / LED Double Flash Beacon 853

# LED Double Flash Beacon BWM 12VDC YE



| Part No.: | 853.310.54 |
|---|---|

| MECHANICAL DATA | |
|---|---|
| Length | 85 mm |
| Width | 85 mm |
| Height | 72 mm |
| Materials | PC<br>PP-GF |
| Dome colour | Yellow |
| Housing colour | Black |
| Protection category | IP66<br>IP67 |
| Connection | Screw terminals |
| cross-sectional area maximum | 1,50mm² / 16AWG |
| Cable entry | Membrane grommet |
| Cable entry minimum | d = 1 mm<br>d = 6 mm |
| Cable entry maximum | d = 12 mm<br>d = 9 mm |
| Type of fixing | Base mounting<br>Wall mounting |
| Working temperature minimum | -25°C |
| Working temperature maximum | +50°C |
| Weight with packaging | 176 g |
| Product weight | 146 g |

| ELECTRICAL DATA | |
|---|---|
| Operating voltage | 12V |
| Operating voltage type | DC |
| Operating voltage tolerance | +/- 10% |
| Rated operational voltage | 12 VDC |
| Rated operational current | 100 mA |
| Rated inrush current | 1.250 mA |
| Protection class | Protection class 2 |
| Pollution degree | 3 |

| OPTICAL DATA | |
|---|---|
| Light source | LED |
| Light colour | Yellow |
| Optical signal image | Double flash |
| Flash frequency | 1 Hz |
| Service life optical | 50,000 h maximum |

! For additional installation and mounting information, refer to the appropriate user guide at www.werma.com. This printed copy is for information only and is subject to alteration.

FlexSQUARE / LED Double Flash Beacon 853

# LED Double Flash Beacon BWM 12VDC YE

| APPROVAL DATA | |
|---|---|
| Conforms with CE | Yes |
| Conforms with RoHS directive | Yes |
| WEEE | Yes |
| Conforms with ATEX-directive | No |
| Conforms with CCC | No |
| Conforms with UL | No |
| Conforms with FCC | No |
| Conforms with ISED | No |
| EAC certificate available | No |
| Conforms with UKCA (Importer) | Yes (WERMA (UK) Ltd.) |
| Conforms with AS-I | No |
| ICAO Certification | No |
| Conforms with DNV | No |
| Conforms with RoHS CN | No |
| Conforms with VdS | No |

! For additional installation and mounting information, refer to the appropriate user guide at www.werma.com. This printed copy is for information only and is subject to alteration.

FlexSQUARE / LED Double Flash Beacon 853

# LED Double Flash Beacon BWM 12VDC YE

## DRAWING

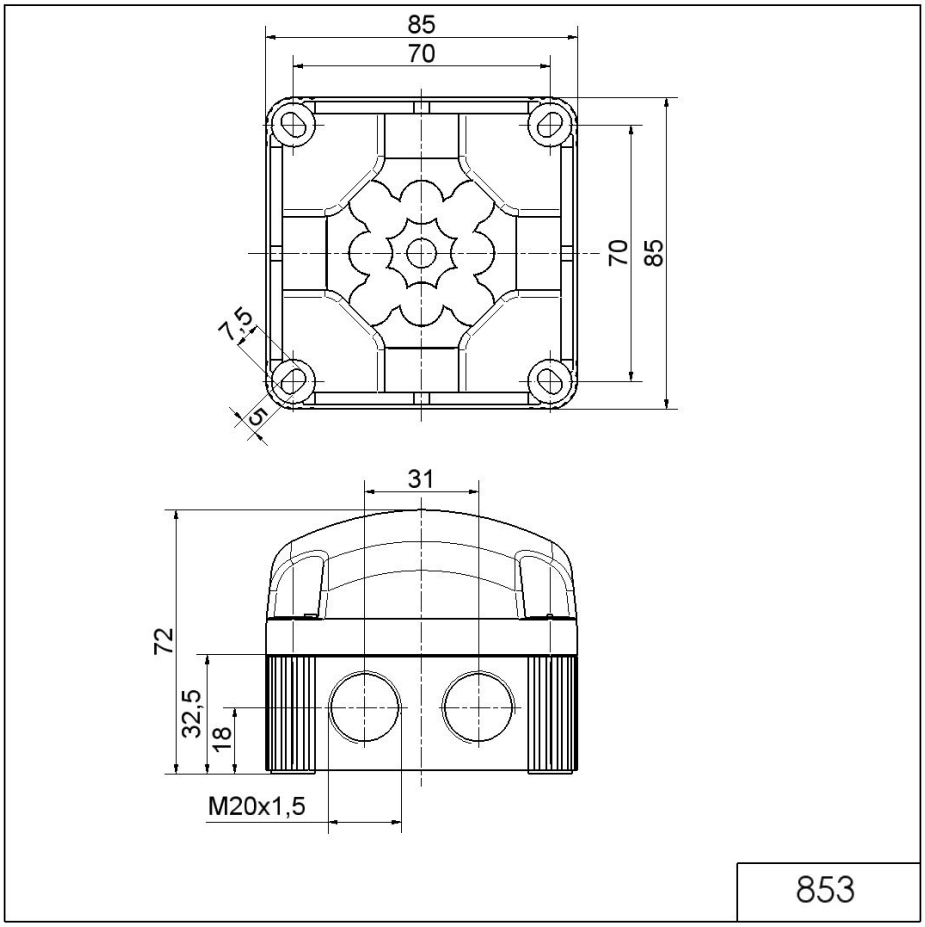


! For additional installation and mounting information, refer to the appropriate user guide at www.werma.com. This printed copy is for information only and is subject to alteration.