FlexSQUARE / LED Double Flash Beacon 853

LED Double Flash Beacon BWM 24VDC RD



Part No.:	853.110.55

MECHANICAL DATA	
Length	85 mm
Width	85 mm
Height	72 mm
Materials	PC PP-GF
Dome colour	Red
Housing colour	Black
Protection category	IP66 IP67
Connection	Screw terminals
cross-sectional area maximum	1,50mm² / 16AWG
Cable entry	Membrane grommet
Cable entry minimum	d = 1 mm d = 6 mm
Cable entry maximum	d = 12 mm d = 9 mm
Type of fixing	Base mounting Wall mounting
Working temperature minimum	-25°C
Working temperature maximum	+50°C
Weight with packaging	172 g
Product weight	137 g

ELECTRICAL DATA	
Operating voltage	24V
Operating voltage type	DC
Operating voltage tolerance	+/- 10%
Rated operational voltage	24 VDC
Rated operational current	80 mA
Rated inrush current	500 mA
Protection class	Protection class 2
Pollution degree	3

OPTICAL DATA	
Light source	LED
Light colour	Red
Optical signal image	Double flash
Flash frequency	1 Hz
Service life optical	50,000 h maximum

! For additional installation and mounting information, refer to the appropriate user guide at www.werma.com. This printed copy is for information only and is subject to alteration.

FlexSQUARE / LED Double Flash Beacon 853

LED Double Flash Beacon BWM 24VDC RD

APPROVAL DATA	
Conforms with CE	Yes
Conforms with RoHS directive	Yes
WEEE	Yes
Conforms with ATEX-directive	No
Conforms with CCC	No
Conforms with UL	No
Conforms with FCC	No
Conforms with ISED	No
EAC certificate available	No
Conforms with UKCA (Importer)	Yes (WERMA (UK) Ltd.)
Conforms with AS-I	No
ICAO Certification	No
Conforms with DNV	No
Conforms with RoHS CN	No
Conforms with VdS	No

! For additional installation and mounting information, refer to the appropriate user guide at www.werma.com. This printed copy is for information only and is subject to alteration.

FlexSQUARE / LED Double Flash Beacon 853

LED Double Flash Beacon BWM 24VDC RD

DRAWING

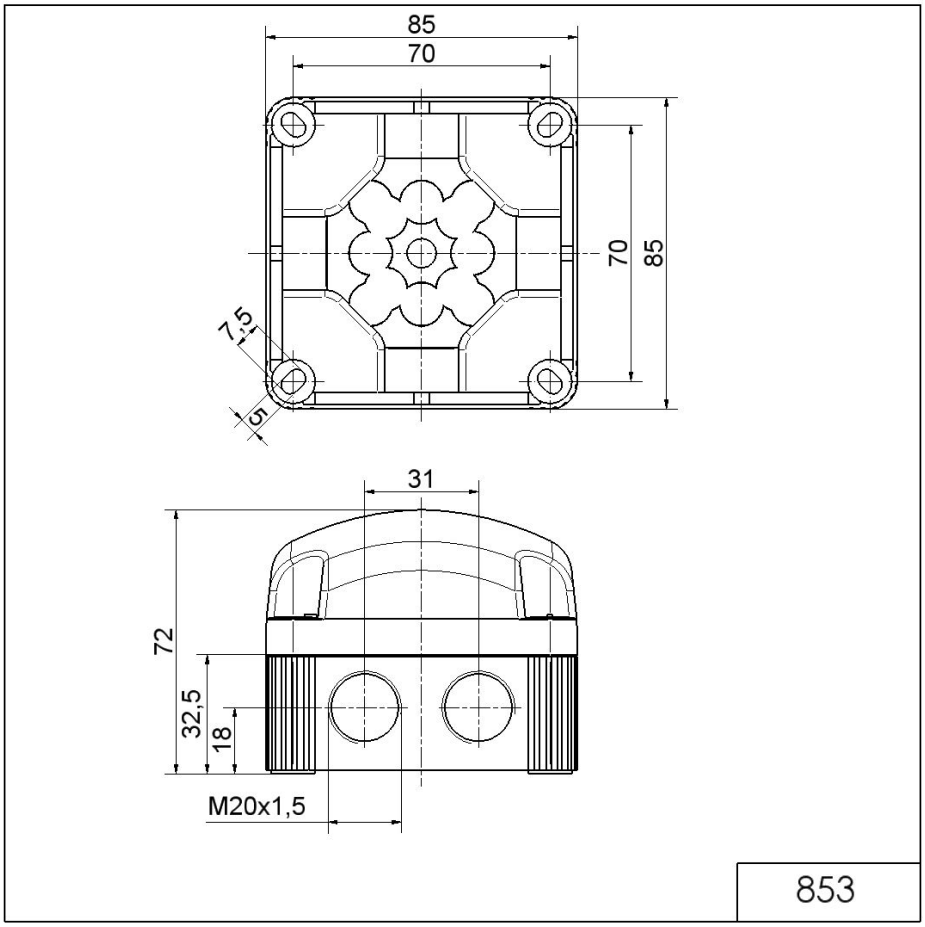

! For additional installation and mounting information, refer to the appropriate user guide at www.werma.com. This printed copy is for information only and is subject to alteration.