Monitorable Beacons / Monitored LED Permanent Beacon 829

Monitored LED Perm. Beacon BM 24VDC RD



Part No.: 829.170.55

MECHANICAL DATA	
Height	137 mm
Diameter	98 mm
Materials	PC PC/ABS
Dome colour	Red
Housing colour	Black
Protection category	IP65
Connection	Screw terminals
cross-sectional area minimum	0,50mm² / 20AWG
cross-sectional area maximum	1,50mm² / 16AWG
Cable entry	Rubber pinch
Cable entry minimum	d = 5 mm
Cable entry maximum	d = 7 mm
Type of fixing	Base mounting Tube mounting Wall mounting
Working temperature minimum	0°C
Working temperature maximum	+50°C
Weight with packaging	262 g
Product weight	218 g

ELECTRICAL DATA	
Operating voltage	24V
Operating voltage type	DC
Operating voltage tolerance	+/- 10%
Rated operational voltage	24 VDC
Rated operational current	150 mA
Rated inrush current	500 mA
Protection class	Protection class 2
Pollution degree	3
monitorable	built-in monitoring

OPTICAL DATA	
Light source	LED
Light colour	Red
Optical signal image	Permanent
Service life optical	50,000 h maximum

APPROVAL DATA	
Conforms with CE	Yes

! For additional installation and mounting information, refer to the appropriate user guide at www.werma.com. This printed copy is for information only and is subject to alteration.

Monitorable Beacons / Monitored LED Permanent Beacon 829

Monitored LED Perm. Beacon BM 24VDC RD

Conforms with RoHS directive	Yes
WEEE	Yes
Conforms with ATEX-directive	No
Conforms with CCC	No
Conforms with UL	cULus
UL Type Rating	Type 12
Conforms with FCC	No
Conforms with ISED	No
EAC certificate available	No
Conforms with UKCA (Importer)	Yes (WERMA (UK) Ltd.)
Conforms with AS-I	No
ICAO Certification	No
Conforms with DNV	No
Conforms with RoHS CN	No
Conforms with VdS	No
MTTFd-value [years]	100

! For additional installation and mounting information, refer to the appropriate user guide at www.werma.com. This printed copy is for information only and is subject to alteration.

Monitorable Beacons / Monitored LED Permanent Beacon 829

Monitored LED Perm. Beacon BM 24VDC RD

DRAWING

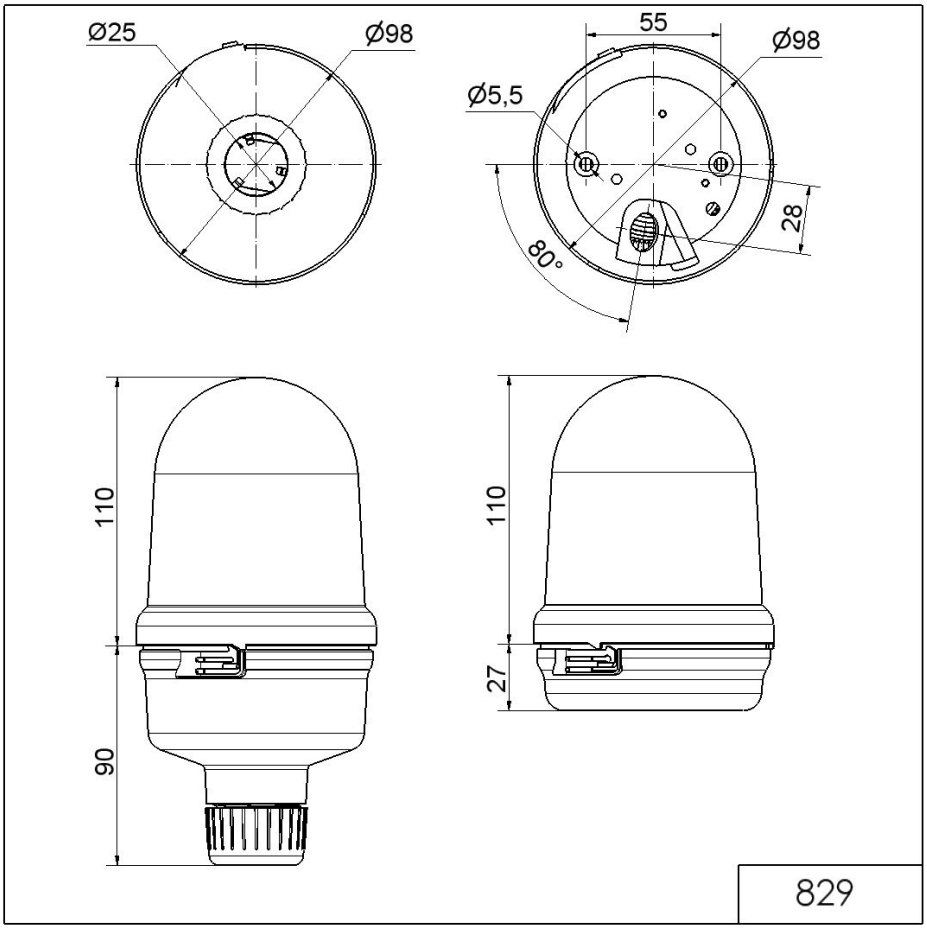

! For additional installation and mounting information, refer to the appropriate user guide at www.werma.com. This printed copy is for information only and is subject to alteration.