Midi free-standing Beacons / Permanent Light 826

Permanent Beacon RM 12-230VAC/DC YE



Part No.: 826.310.00

MECHANICAL DATA	
Height	200 mm
Diameter	98 mm
Materials	PC PC/ABS
Dome colour	Yellow
Housing colour	Black
Protection category	IP65
Connection	Insulation-displacement contac
cross-sectional area maximum	1,50mm² / 16AWG
Cable entry	Through hole
Cable entry maximum	d = 11 mm
Type of fixing	Tube mounting
Working temperature minimum	-20°C
Working temperature maximum	+50°C
Weight with packaging	290 g
Product weight	224 g

ELECTRICAL DATA	
Operating voltage	12-230V
Operating voltage type	AC/DC
Protection class	Protection class 2
Pollution degree	3
Overvoltage category	II
insulation voltage	Ui = 250V / Uimp = 2500V

OPTICAL DATA	
Light colour	Yellow
Service life optical	depends on bulb

APPROVAL DATA	
Conforms with CE	Yes
Conforms with RoHS directive	Yes
WEEE	Yes
Conforms with ATEX-directive	No
Conforms with CCC	Yes
Conforms with UL	cULus
UL Type Rating	Type 12
Conforms with FCC	No
Conforms with ISED	No

! For additional installation and mounting information, refer to the appropriate user guide at www.werma.com. This printed copy is for information only and is subject to alteration.

Midi free-standing Beacons / Permanent Light 826

Permanent Beacon RM 12-230VAC/DC YE

EAC certificate available	No
Conforms with UKCA (Importer)	Yes (WERMA (UK) Ltd.)
Conforms with AS-I	No
ICAO Certification	No
Conforms with DNV	No
Conforms with RoHS CN	No
Conforms with VdS	No

DRAWING

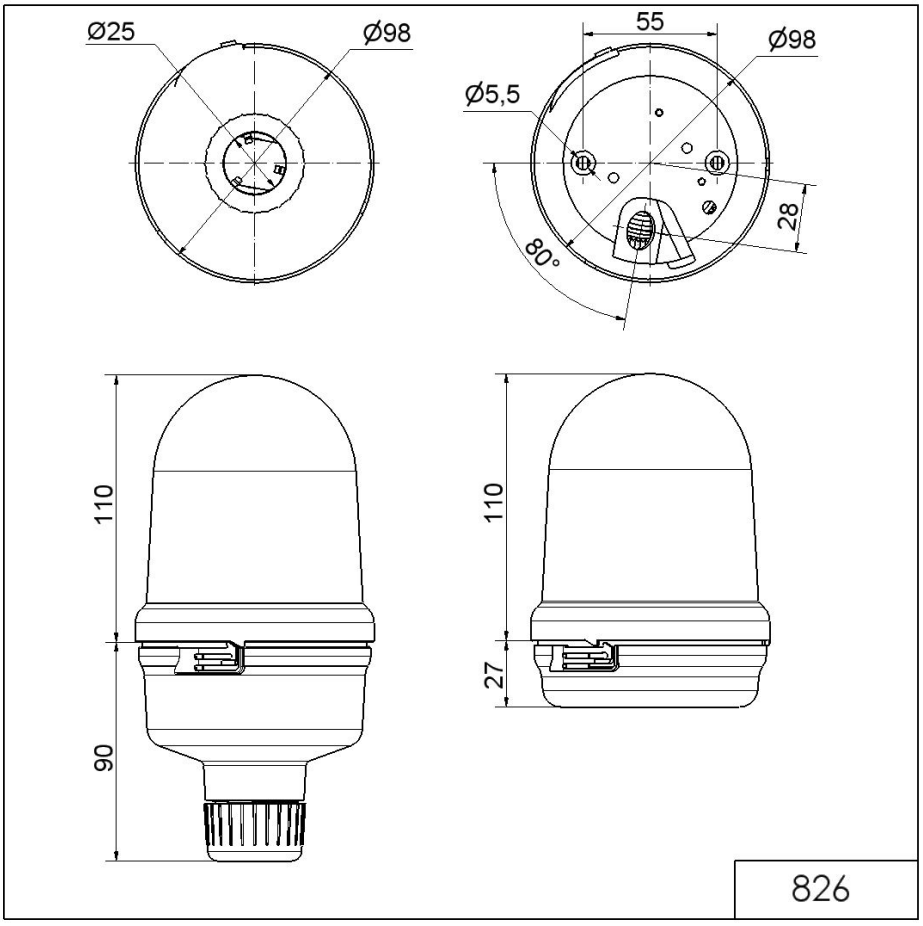

! For additional installation and mounting information, refer to the appropriate user guide at www.werma.com. This printed copy is for information only and is subject to alteration.