Mini installation beacon / LED Beacon 801

LED Perm. Beacon EM 24VAC/DC CL



Part No.: 801.400.75

MECHANICAL DATA	
Height	85 mm
Diameter	57 mm
Materials	PC PC/ABS
Dome colour	Clear
Housing colour	Black
Protection category	IP65
Connection	Screw terminals
cross-sectional area maximum	1,50mm² / 16AWG
Cable entry maximum	d = 9 mm
Tension relief	Pull-out protection
Type of fixing	Built-in mounting
Working temperature minimum	-20°C
Working temperature maximum	+50°C
Weight with packaging	51 g
Product weight	32 g

ELECTRICAL DATA	
Operating voltage	24V
Operating voltage type	AC/DC
Operating voltage frequency	50Hz
Operating voltage tolerance	+/- 10%
Rated operational voltage	24 VDC
Rated operational current	45 mA
Rated inrush current	500 mA
Protection class	Protection class 2
Pollution degree	3 In the connection area: 2

OPTICAL DATA	
Light source	LED
Light colour	White
Optical signal image	Permanent
Service life optical	100,000 h maximum

APPROVAL DATA	
Conforms with CE	Yes
Conforms with RoHS directive	Yes
WEEE	Yes
Conforms with ATEX-directive	No

! For additional installation and mounting information, refer to the appropriate user guide at www.werma.com. This printed copy is for information only and is subject to alteration.

Mini installation beacon / LED Beacon 801

LED Perm. Beacon EM 24VAC/DC CL

Conforms with CCC	No
Conforms with UL	cULus
UL Type Rating	Type 12
Conforms with FCC	No
Conforms with ISED	No
EAC certificate available	No
Conforms with UKCA (Importer)	Yes (WERMA (UK) Ltd.)
Conforms with AS-I	No
ICAO Certification	No
Conforms with DNV	No
Conforms with RoHS CN	No
Conforms with VdS	No

DRAWING

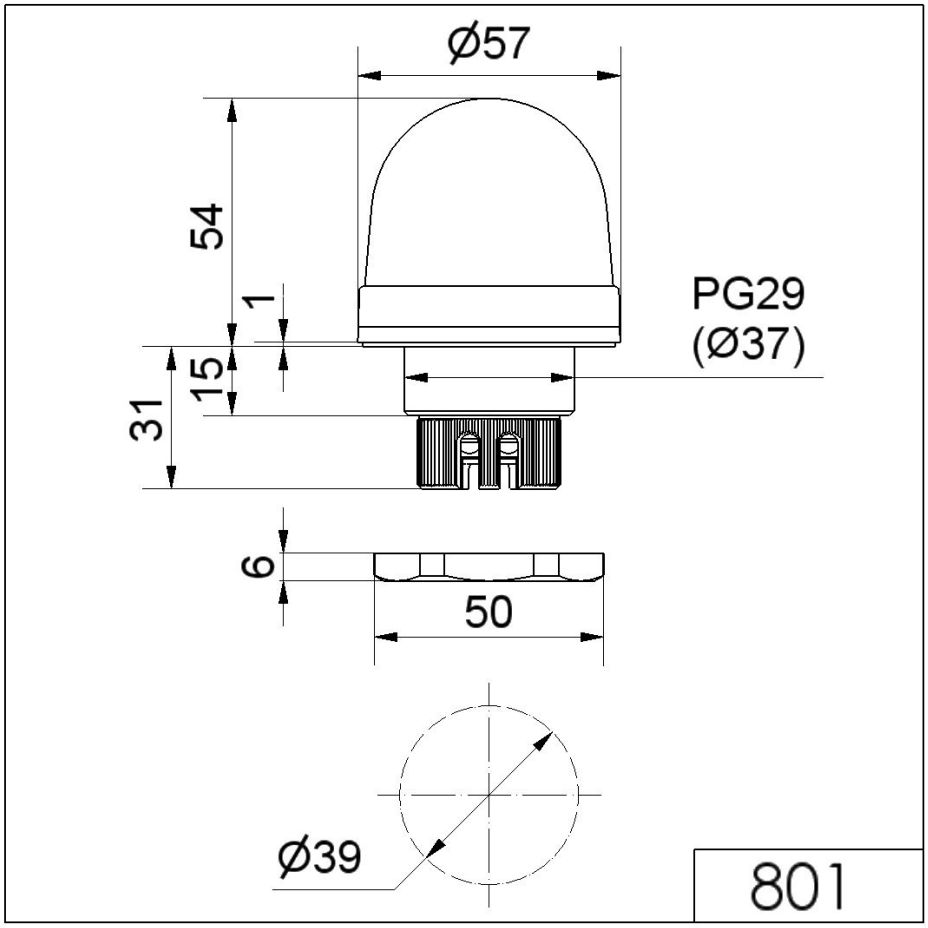

! For additional installation and mounting information, refer to the appropriate user guide at www.werma.com. This printed copy is for information only and is subject to alteration.