Completely pre-assembled Signal Towers / CleanSIGN

CleanSIGN BM Contin. tone 24VDC RGY



Part No.:	**695.210.55**
Series:	**CleanSIGN**

MECHANICAL DATA	
Length	152 mm
Width	112 mm
Height	390 mm
Diameter	77 mm
Materials	PA
Dome colour	Clear
Housing colour	Black
Protection category	IP67 IP69K
Connection	Screw terminals
cross-sectional area maximum	1,50mm² / 16AWG
Type of fixing	Base mounting
Working temperature minimum	-30°C
Working temperature maximum	+50°C
Weight with packaging	559 g
Product weight	419 g

ELECTRICAL DATA	
Operating voltage	24V
Operating voltage type	DC
Operating voltage tolerance	+/- 10%
Rated operational voltage	24 VDC
Rated operational current	260 mA
Rated inrush current	280 mA
Protection class	Protection class 2
Pollution degree	3

OPTICAL DATA	
Light source	LED
Light colour	MC 3 colours
Optical signal image	Permanent
Service life optical	50,000 h maximum

ACOUSTIC DATA	
Volume (max) at 1m distance	85,0 dB (A)
Acoustic signal image	Continuous tone
Number of tones	1 tone
Audio frequency	2400 Hz
Acoustic service life	5,000 h maximum

! For additional installation and mounting information, refer to the appropriate user guide at www.werma.com. This printed copy is for information only and is subject to alteration.

Completely pre-assembled Signal Towers / CleanSIGN

CleanSIGN BM Contin. tone 24VDC RGY

APPROVAL DATA	
Conforms with CE	Yes
Conforms with RoHS directive	Yes
WEEE	Yes
Conforms with ATEX-directive	No
Conforms with CCC	No
Conforms with UL	No
Conforms with FCC	No
Conforms with ISED	No
EAC certificate available	No
Conforms with UKCA (Importer)	Yes (WERMA (UK) Ltd.)
Conforms with CMIM	No
Conforms with AS-I	No
ICAO Certification	No
Conforms with DNV	No
Conforms with RoHS CN	No
Conforms with VdS	No

! For additional installation and mounting information, refer to the appropriate user guide at www.werma.com. This printed copy is for information only and is subject to alteration.

Completely pre-assembled Signal Towers / CleanSIGN

CleanSIGN BM Contin. tone 24VDC RGY

DRAWING

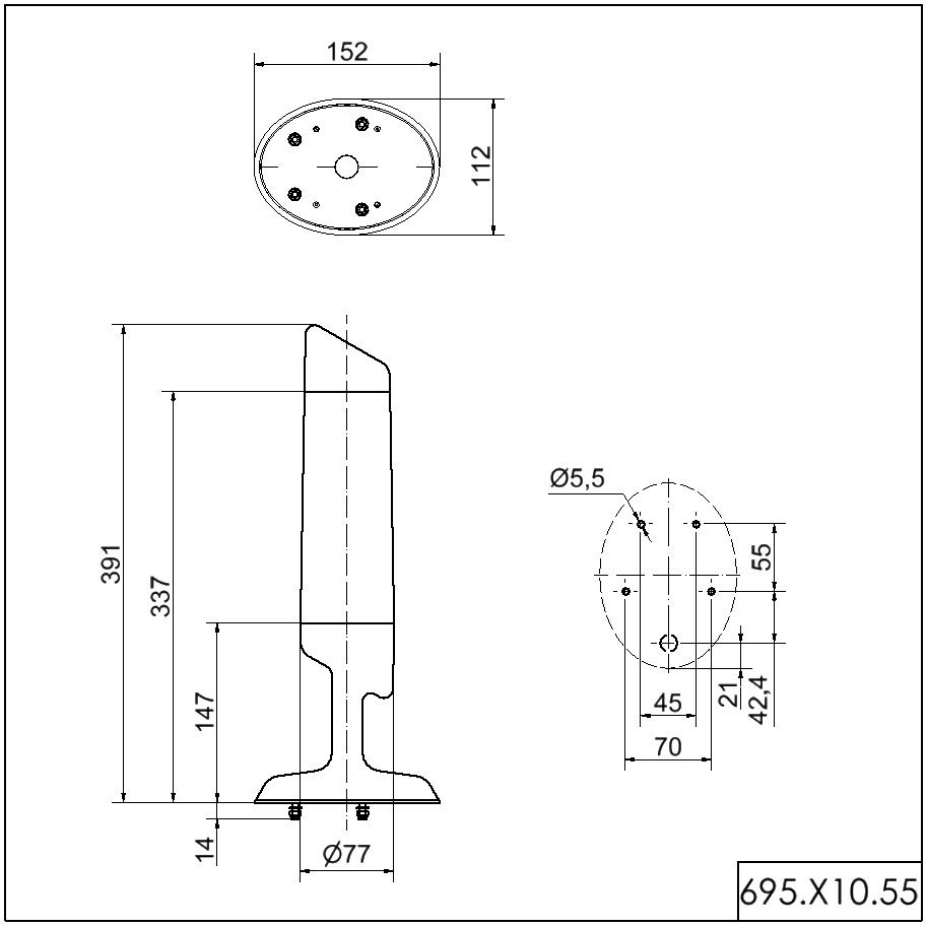

! For additional installation and mounting information, refer to the appropriate user guide at www.werma.com. This printed copy is for information only and is subject to alteration.