FlatSIGN / FlatSIGN without Audible Signal

FlatSIGN sr WM 24VAC/DC GN/YE/RD



Part No.:	**691.300.55**
Series:	**FlatSIGN**

MECHANICAL DATA	
Length	105 mm
Width	45 mm
Height	195 mm
Materials	PC PC/ABS
Dome colour	Clear
Housing colour	Silver
Protection category	IP65
Connection	Screw terminals
cross-sectional area minimum	0,50mm² / 20AWG
cross-sectional area maximum	1,50mm² / 16AWG
Cable entry	Membrane grommet
Cable entry minimum	d = 1 mm
Cable entry maximum	d = 13 mm
Tension relief	Present (conforms to VDE)
Type of fixing	Wall mounting
Working temperature minimum	-30°C
Working temperature maximum	+50°C
Weight with packaging	285 g
Product weight	233 g

ELECTRICAL DATA	
Operating voltage	24V
Operating voltage type	AC/DC
Operating voltage frequency	50Hz
Operating voltage tolerance	+/- 10%
Rated operational voltage	24 VDC
Rated operational current	30 mA
Rated inrush current	300 mA
Protection class	Protection class 2
Pollution degree	3

OPTICAL DATA	
Light source	LED
Light colour	Green Red Yellow
Optical signal image	Blink Permanent

! For additional installation and mounting information, refer to the appropriate user guide at www.werma.com. This printed copy is for information only and is subject to alteration.

FlatSIGN / FlatSIGN without Audible Signal

FlatSIGN sr WM 24VAC/DC GN/YE/RD

Blink frequency	1 Hz
Service life optical	50,000 h maximum

ACOUSTIC DATA	
Acoustic service life	5,000 h maximum

APPROVAL DATA	
Conforms with CE	Yes
Conforms with RoHS directive	Yes
WEEE	Yes
Conforms with ATEX-directive	No
Conforms with CCC	No
Conforms with UL	ULus
UL Type Rating	Type 5
Conforms with FCC	No
Conforms with ISED	No
EAC certificate available	No
Conforms with UKCA (Importer)	Yes (WERMA (UK) Ltd.)
Conforms with AS-I	No
ICAO Certification	No
Conforms with DNV	No
Conforms with RoHS CN	No
Conforms with VdS	No

! For additional installation and mounting information, refer to the appropriate user guide at www.werma.com. This printed copy is for information only and is subject to alteration.

FlatSIGN / FlatSIGN without Audible Signal

FlatSIGN sr WM 24VAC/DC GN/YE/RD

DRAWING

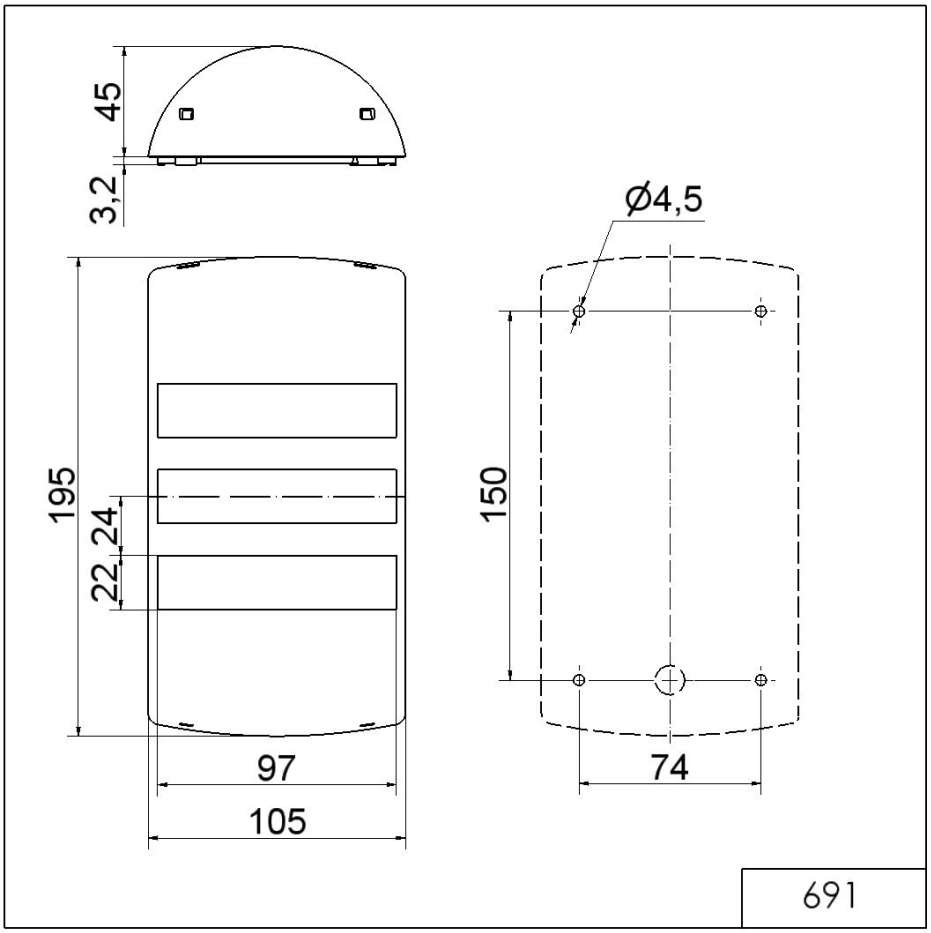

! For additional installation and mounting information, refer to the appropriate user guide at www.werma.com. This printed copy is for information only and is subject to alteration.