Completely pre-assembled Signal Towers / RST 56

RST56 Built-In 24V BU/GN/YE/RD/Buzzer



Part No.:	**686.483.15**
Series:	**RST 56**

MECHANICAL DATA	
Height	249 mm
Diameter	57 mm
Materials	ABS PC
Dome colour	White
Housing colour	Black
Protection category	IP65 IP69K
Connection	M12 socket 8-pole
Type of fixing	Built-in mounting
Working temperature minimum	-30°C
Working temperature maximum	+50°C
Weight with packaging	332.9 g
Product weight	282.9 g
IK-Code (IEC 62262)	IK05

ELECTRICAL DATA	
Operating voltage	24V
Operating voltage type	DC
Operating voltage tolerance	+/- 10%
Rated operational voltage	24 VDC
Rated operational current	185 mA
Protection class	Protection class 3
Pollution degree	3

OPTICAL DATA	
Light source	LED
Light colour	Blue Green Red Yellow
Optical signal image	Permanent
Service life optical	50,000 h maximum

ACOUSTIC DATA	
Volume (max) at 1m distance	90 dB(A)
Acoustic signal image	Continuous tone
Number of tones	1 tone
Audio frequency	2900 Hz
Acoustic service life	5,000 h maximum

! For additional installation and mounting information, refer to the appropriate user guide at www.werma.com. This printed copy is for information only and is subject to alteration.

Completely pre-assembled Signal Towers / RST 56

RST56 Built-In 24V BU/GN/YE/RD/Buzzer

APPROVAL DATA	
Conforms with CE	Yes
Conforms with RoHS directive	Yes
WEEE	Yes
Conforms with ATEX-directive	No
Conforms with CCC-Ex	No
Conforms with CCC	No
Conforms with UL	No
Conforms with FCC	No
Conforms with ISED	No
EAC certificate available	No
Conforms with UKCA (Importer)	Yes (WERMA (UK) Ltd.)
Conforms with CMIM	No
Conforms with AS-I	No
Conforms with DNV	No
Conforms with RoHS CN	10 years
Conforms with VdS	No

! For additional installation and mounting information, refer to the appropriate user guide at www.werma.com. This printed copy is for information only and is subject to alteration.

Completely pre-assembled Signal Towers / RST 56

RST56 Built-In 24V BU/GN/YE/RD/Buzzer

DRAWING

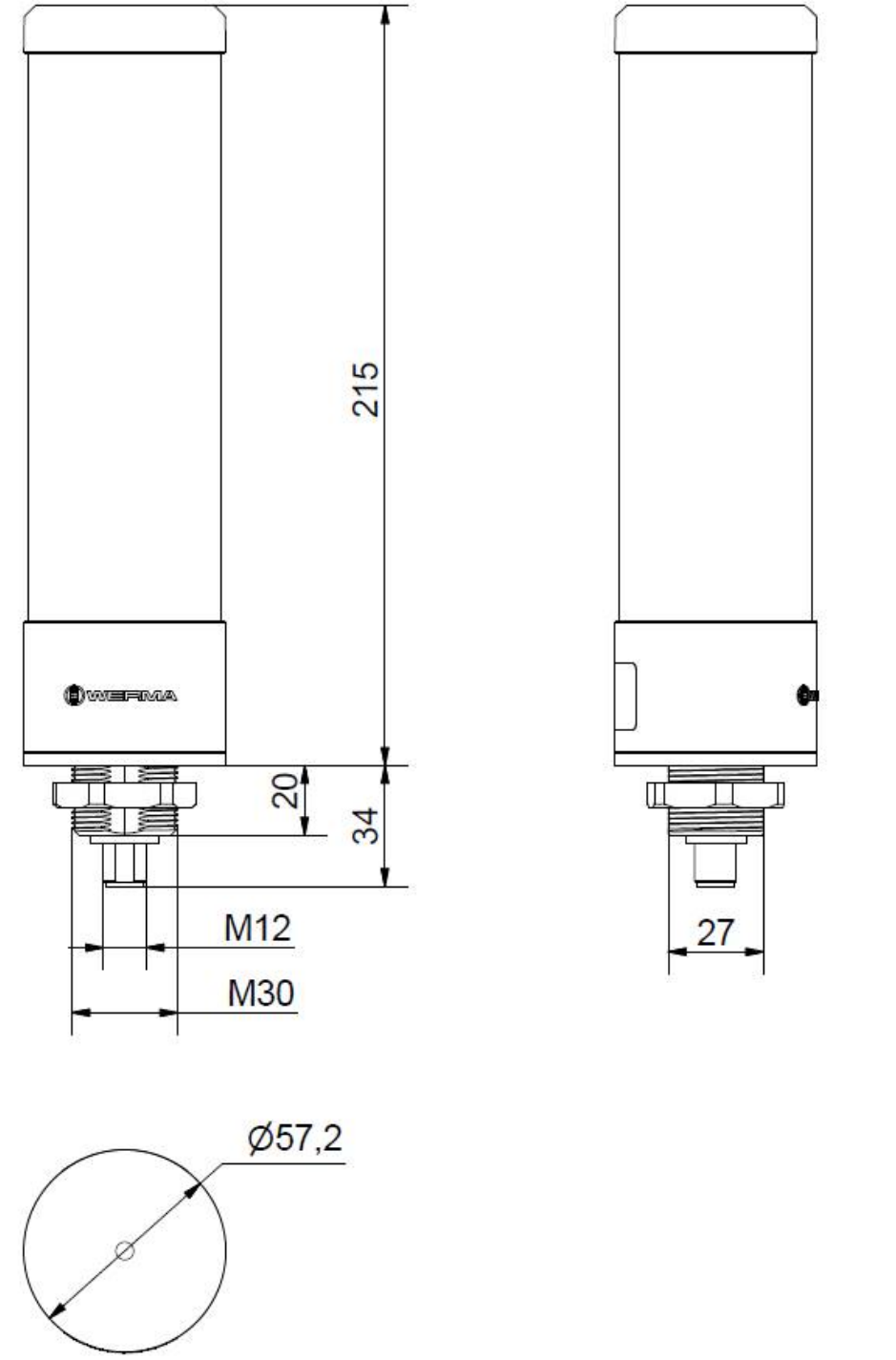

! For additional installation and mounting information, refer to the appropriate user guide at www.werma.com. This printed copy is for information only and is subject to alteration.