Completely pre-assembled Signal Towers / RST 56

RST56 GN/RD/Buzzer 24V



Part No.:	**686.260.35**
Series:	**RST 56**

MECHANICAL DATA	
Height	156 mm
Diameter	57 mm
Materials	ABS PC PC/ABS
Dome colour	White
Housing colour	Black
Protection category	IP66 IP69K
Connection	Spring-type terminal
cross-sectional area minimum	0,14mm² / 26AWG
cross-sectional area maximum	1,50mm² / 16AWG
Cable entry	Through hole
Cable entry maximum	d = 9 mm
Type of fixing	Base mounting
Working temperature minimum	-30°C
Working temperature maximum	+50°C
Weight with packaging	231 g
Product weight	200 g
Stipping length	7 mm
IK-Code (IEC 62262)	IK05

ELECTRICAL DATA	
Operating voltage	24V
Operating voltage type	DC
Operating voltage tolerance	+/- 10%
Rated operational voltage	24 VDC
Rated operational current	100 mA
Rated inrush current	400 mA
Protection class	Protection class 3
Pollution degree	3

OPTICAL DATA	
Light source	LED
Light colour	Green Red
Optical signal image	Permanent
Service life optical	50,000 h maximum

ACOUSTIC DATA

! For additional installation and mounting information, refer to the appropriate user guide at www.werma.com. This printed copy is for information only and is subject to alteration.

Completely pre-assembled Signal Towers / RST 56

RST56 GN/RD/Buzzer 24V

Volume (max) at 1m distance	90 dB(A)
Acoustic signal image	Continuous tone Pulse tone
Number of tones	2 tone
Volume adjustable	Switch
Volume adjustment range	82 / 90 dB(A)
Audio frequency	2900 Hz
Acoustic service life	5,000 h maximum

APPROVAL DATA	
Conforms with CE	Yes
Conforms with RoHS directive	Yes
WEEE	Yes
Conforms with ATEX-directive	No
Conforms with CCC-Ex	No
Conforms with CCC	No
Conforms with UL	No
Conforms with FCC	No
Conforms with ISED	No
EAC certificate available	No
Conforms with UKCA (Importer)	Yes (WERMA (UK) Ltd.)
Conforms with CMIM	No
Conforms with AS-I	No
Conforms with DNV	No
Conforms with RoHS CN	10 years
Conforms with VdS	No

! For additional installation and mounting information, refer to the appropriate user guide at www.werma.com. This printed copy is for information only and is subject to alteration.

Completely pre-assembled Signal Towers / RST 56

RST56 GN/RD/Buzzer 24V

DRAWING

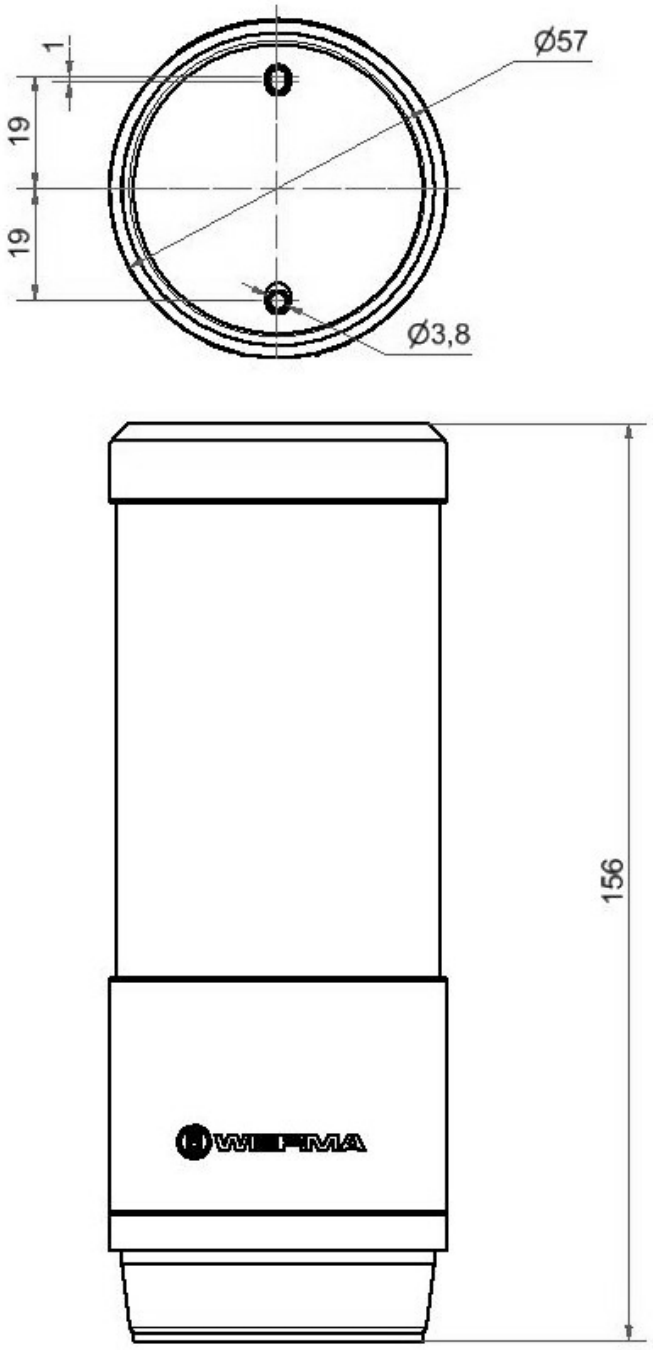

! For additional installation and mounting information, refer to the appropriate user guide at www.werma.com. This printed copy is for information only and is subject to alteration.