Completely pre-assembled Signal Towers / eSIGN

# eSIGN 15 Segments WH




| | |
|---|---|
| **Part No.:** | **657.700.55** |
| **Series:** | **eSIGN** |

| **MECHANICAL DATA** | |
|---|---|
| Height | 372 mm |
| Diameter | 72 mm |
| Materials | PC |
| Dome colour | Translucent |
| Housing colour | White |
| Protection category | IP66<br>IP69K |
| Connection | M12 plug 8-pole |
| Type of fixing | Base mounting<br>Tube mounting |
| Working temperature minimum | -30°C |
| Working temperature maximum | +60°C |
| Weight with packaging | 850 g |
| Product weight | 794 g |
| IK-Code (IEC 62262) | IK08 |

| **ELECTRICAL DATA** | |
|---|---|
| Operating voltage | 24V |
| Operating voltage type | DC |
| Operating voltage tolerance | +/- 10% |
| Rated operational voltage | 24 VDC |
| Rated operational current | 555 mA |
| Rated inrush current | 800 mA |
| Protection class | Protection class 3 |
| Pollution degree | 3 |
| Overvoltage category | I |
| insulation voltage | Ui = 50V / Uimp = 330V |
| Request to external PSU | SELV/PELV |
| connectivity | Digital entrance<br>USB |

| **OPTICAL DATA** | |
|---|---|
| Light source | LED |
| Light colour | MC >1.000.000 colours |
| Optical signal image | Blink<br>Double flash<br>Flash<br>Permanent |
| Blink frequency | Configurable |
| Service life optical | 50,000 h maximum |

! For additional installation and mounting information, refer to the appropriate user guide at www.werma.com. This printed copy is for information only and is subject to alteration.

Completely pre-assembled Signal Towers / eSIGN

# eSIGN 15 Segments WH

| APPROVAL DATA | |
|---|---|
| Conforms with CE | Yes |
| Conforms with RoHS directive | Yes |
| WEEE | Yes |
| Conforms with ATEX-directive | No |
| Conforms with CCC-Ex | No |
| Conforms with CCC | No |
| Conforms with UL | cULus Listed |
| UL Type Rating | Type 4/4X/12/13 |
| Conforms with FCC | No |
| Conforms with ISED | No |
| EAC certificate available | No |
| Conforms with UKCA (Importer) | Yes (WERMA (UK) Ltd.) |
| Conforms with CMIM | No |
| Conforms with AS-I | No |
| Conforms with DNV | No |
| Conforms with RoHS CN | 25 years |
| Conforms with VdS | No |
| MTTFd-value [years] | 128 |

! For additional installation and mounting information, refer to the appropriate user guide at www.werma.com. This printed copy is for information only and is subject to alteration.

Completely pre-assembled Signal Towers / eSIGN

# eSIGN 15 Segments WH

## DRAWING

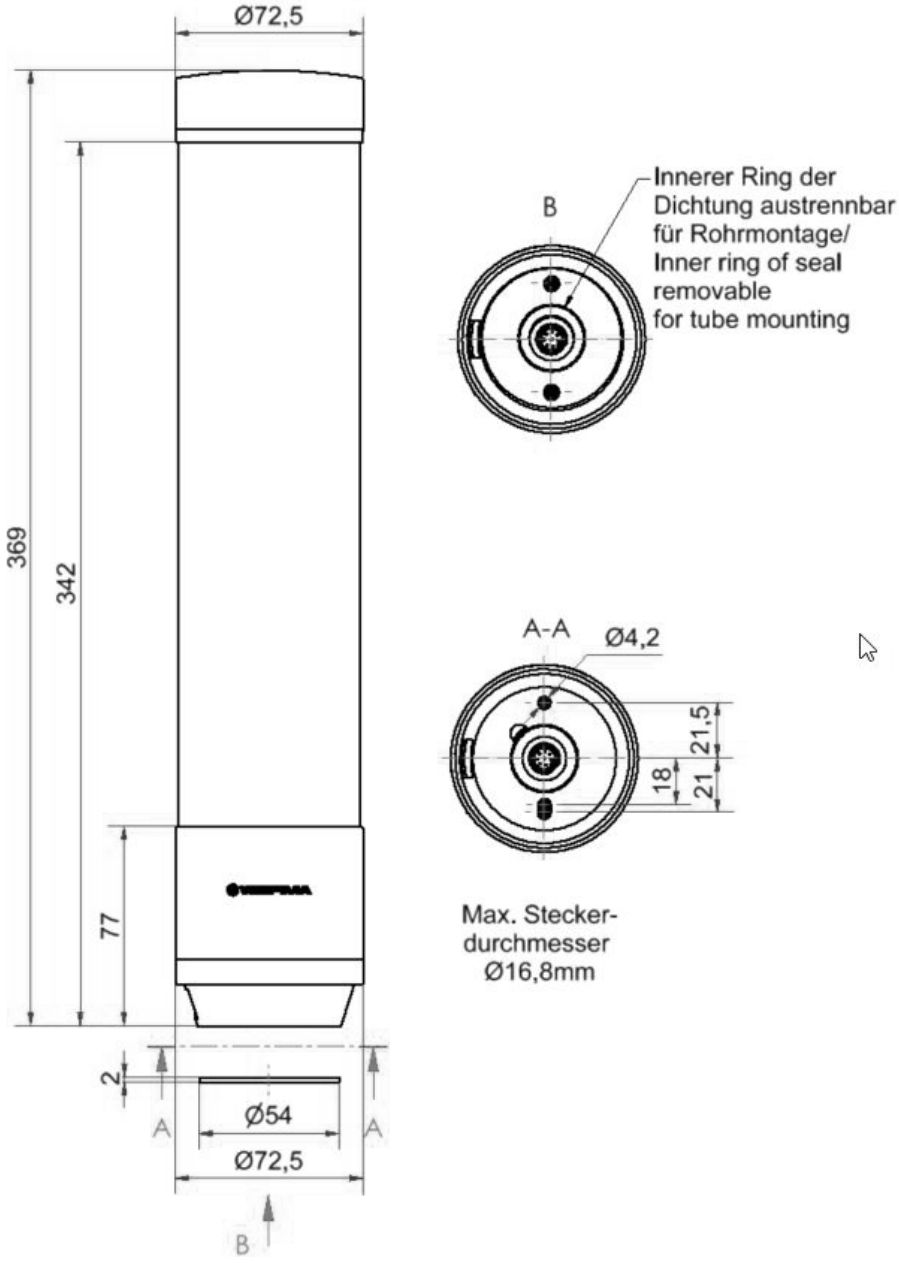


! For additional installation and mounting information, refer to the appropriate user guide at www.werma.com. This printed copy is for information only and is subject to alteration.