eSIGN IO-Link 6 Segments with Siren BK

Part No.:	**657.450.55**
Series:	**eSIGN**

MECHANICAL DATA	
Height	219 mm
Diameter	72 mm
Materials	PC
Dome colour	Translucent
Housing colour	Black
Protection category	IP66 IP69K
Connection	M12 plug 4-pole
Type of fixing	Base mounting Tube mounting
Working temperature minimum	-30°C
Working temperature maximum	+60°C
Weight with packaging	507 g
Product weight	460 g
IK-Code (IEC 62262)	IK08

ELECTRICAL DATA	
Operating voltage	24V
Operating voltage type	DC
Operating voltage tolerance	+/- 20%
Rated operational voltage	24 VDC
Rated operational current	290 mA
Rated inrush current	800 mA
Protection class	Protection class 3
Pollution degree	3
Overvoltage category	I
insulation voltage	Ui = 50V / Uimp = 330V
Request to external PSU	SELV/PELV
connectivity	IO-Link

OPTICAL DATA	
Light source	LED
Light colour	MC >1.000.000 colours
Optical signal image	Blink Double flash Flash Permanent Revolving Triple flash
Blink frequency	Configurable

! For additional installation and mounting information, refer to the appropriate user guide at www.werma.com. This printed copy is for information only and is subject to alteration.

eSIGN IO-Link 6 Segments with Siren BK

Service life optical	50,000 h maximum
ACOUSTIC DATA	
Volume (max) at 1m distance	105 dB(A)
Acoustic signal image	Multi-tone
Number of tones	10 tone
Volume adjustable	Software controlled
Volume adjustment range	80 - 105 dB(A)
Acoustic service life	5,000 h maximum
APPROVAL DATA	
Conforms with CE	Yes
Conforms with RoHS directive	Yes
WEEE	Yes
Conforms with RED directive	No
Conforms with ATEX-directive	No
Conforms with CCC-Ex	No
Conforms with CCC	No
Conforms with UL	cULus
UL Type Rating	Type 4/4X/12/13
Conforms with FCC	No
Conforms with ISED	No
EAC certificate available	No
Conforms with UKCA (Importer)	Yes (WERMA (UK) Ltd.)
Conforms with CMIM	No
Conforms with AS-I	No
Conforms with DNV	No
Conforms with RoHS CN	10 years
Conforms with VdS	No
MTTFd-value [years]	193

! For additional installation and mounting information, refer to the appropriate user guide at www.werma.com. This printed copy is for information only and is subject to alteration.

eSIGN IO-Link 6 Segments with Siren BK

DRAWING

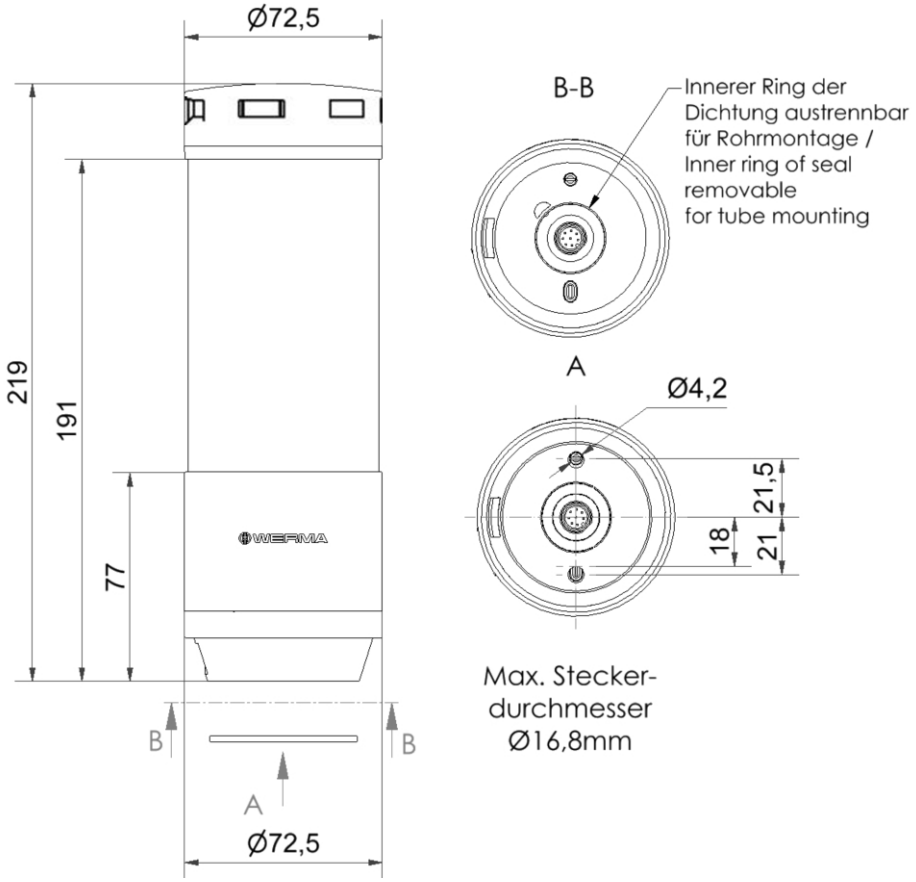

! For additional installation and mounting information, refer to the appropriate user guide at www.werma.com. This printed copy is for information only and is subject to alteration.