Signal tower / Pre-assembled Signal Tower

AndonLIGHT KS71 GN/YE/RD



Part No.:	**649.260.01**
Series:	**KombiSIGN 71**

MECHANICAL DATA	
Height	299 mm
Diameter	70 mm
Materials	PA-GF PC
Dome colour	Green Red Yellow
Housing colour	Black
Protection category	IP30
Connection	Spring-type terminal
cross-sectional area maximum	1,50mm² / 16AWG
Cable entry	Through hole
Cable entry maximum	d = 11 mm
Tension relief	Not present
Type of fixing	Tube mounting
Working temperature minimum	0°C
Working temperature maximum	+40°C
Weight with packaging	1058 g
Product weight	944 g

ELECTRICAL DATA	
Operating voltage	115-230V
Operating voltage type	AC
Operating voltage frequency	50Hz at 230V 60Hz at 115V
Operating voltage tolerance	+/- 10%
Rated operational voltage	230 VAC
Rated operational current	40 mA
Rated inrush current	>10A
Protection class	Protection class 2
Pollution degree	3
Overvoltage category	II
insulation voltage	Ui = 250V / Uimp = 2500V

OPTICAL DATA	
Light source	LED
Light colour	Green Red Yellow
Optical signal image	Permanent

! For additional installation and mounting information, refer to the appropriate user guide at www.werma.com. This printed copy is for information only and is subject to alteration.

Signal tower / Pre-assembled Signal Tower

AndonLIGHT KS71 GN/YE/RD

Service life optical	50,000 h maximum

APPROVAL DATA	
Conforms with CE	No
Conforms with RoHS directive	Fulfills substance restriction
WEEE	Yes
Conforms with ATEX-directive	No
Conforms with CCC	No
Conforms with UL	cULus (all individual items)
Conforms with FCC	No
Conforms with ISED	No
EAC certificate available	No
Conforms with AS-I	No
ICAO Certification	No
Conforms with DNV	No
Conforms with RoHS CN	No
Conforms with VdS	No

! For additional installation and mounting information, refer to the appropriate user guide at www.werma.com. This printed copy is for information only and is subject to alteration.

Signal tower / Pre-assembled Signal Tower

AndonLIGHT KS71 GN/YE/RD

DRAWING

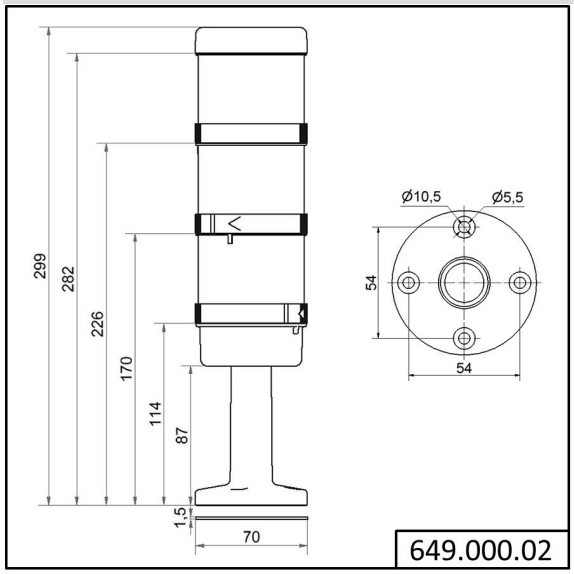

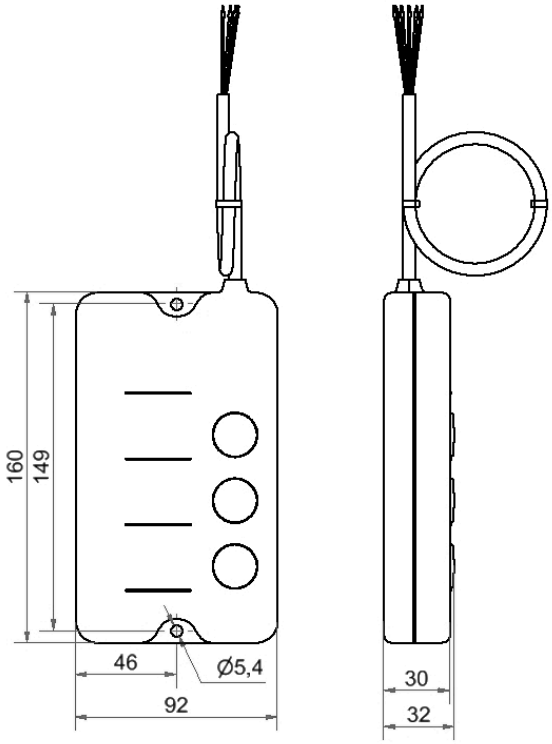

! For additional installation and mounting information, refer to the appropriate user guide at www.werma.com. This printed copy is for information only and is subject to alteration.