Modular Signal Towers / KombiSIGN 71

Signal tower KS71 BWM 24VAC/DC GN/RD



Part No.:	**649.240.04**
Series:	**KombiSIGN 71**

MECHANICAL DATA	
Height	155 mm
Diameter	70 mm
Materials	PA-GF PC
Dome colour	Green Red
Housing colour	Black
Protection category	IP65
Connection	Spring-type terminal
cross-sectional area minimum	0,25mm² / 24AWG
cross-sectional area maximum	1,50mm² / 16AWG
Cable entry	Through hole
Cable entry maximum	d = 11 mm
Tension relief	Not present
Type of fixing	Base mounting Wall mounting
Working temperature minimum	-20°C
Working temperature maximum	+50°C
Weight with packaging	235 g
Product weight	200 g

ELECTRICAL DATA	
Operating voltage	24V
Operating voltage type	AC/DC
Operating voltage frequency	50Hz
Operating voltage tolerance	+/- 10%
Rated operational voltage	24 VDC
Rated operational current	60 mA
Rated inrush current	<500mA
Protection class	Protection class 2
Pollution degree	3

OPTICAL DATA	
Light source	LED
Light colour	Green Red
Optical signal image	Permanent
Service life optical	50,000 h maximum

APPROVAL DATA

! For additional installation and mounting information, refer to the appropriate user guide at www.werma.com. This printed copy is for information only and is subject to alteration.

Modular Signal Towers / KombiSIGN 71

Signal tower KS71 BWM 24VAC/DC GN/RD

Conforms with CE	Yes (through the components)
Conforms with RoHS directive	Fulfills substance restriction
WEEE	Yes
Conforms with ATEX-directive	No
Conforms with CCC	No
Conforms with UL	cULus (all individual items)
Conforms with FCC	No
Conforms with ISED	No
EAC certificate available	No
Conforms with AS-I	No
ICAO Certification	No
Conforms with DNV	No
Conforms with RoHS CN	No
Conforms with VdS	No

! For additional installation and mounting information, refer to the appropriate user guide at www.werma.com. This printed copy is for information only and is subject to alteration.

Modular Signal Towers / KombiSIGN 71

Signal tower KS71 BWM 24VAC/DC GN/RD

DRAWING

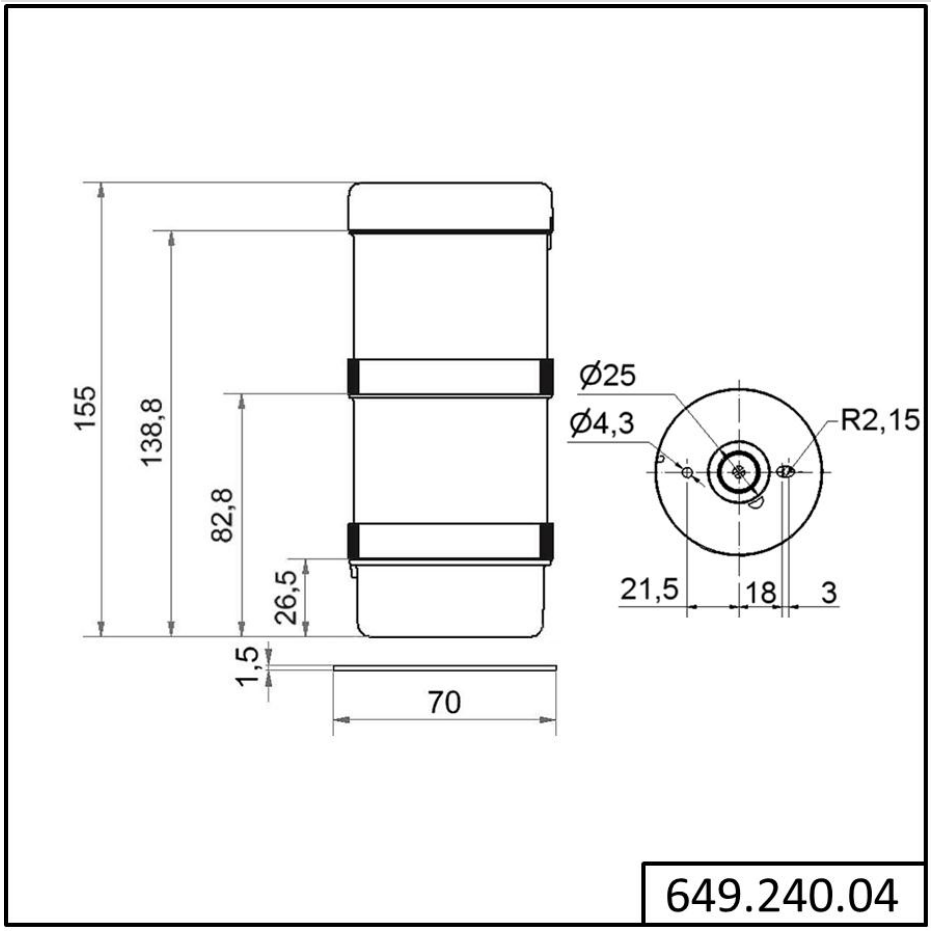

! For additional installation and mounting information, refer to the appropriate user guide at www.werma.com. This printed copy is for information only and is subject to alteration.