Modular Signal Towers / KombiSIGN 72

KS72 Design BM 24VAC/DC GN/YE/RD



Part No.:	**649.001.02**
Series:	**KombiSIGN 72**

MECHANICAL DATA	
Height	299 mm
Diameter	70 mm
Materials	PA-GF PC
Dome colour	Clear
Housing colour	Silver
Protection category	IP65
Connection	Spring-type terminal
cross-sectional area minimum	0,25mm² / 24AWG
cross-sectional area maximum	1,50mm² / 16AWG
Cable entry	Through hole
Cable entry maximum	d = 11 mm
Tension relief	Not present
Type of fixing	Base mounting
Working temperature minimum	-20°C
Working temperature maximum	+50°C
Weight with packaging	411 g
Product weight	355 g

ELECTRICAL DATA	
Operating voltage	24V
Operating voltage type	AC/DC
Operating voltage frequency	50Hz
Operating voltage tolerance	+/- 10%
Rated operational voltage	24 VDC
Rated operational current	240 mA
Rated inrush current	<500mA
Protection class	Protection class 2
Pollution degree	3

OPTICAL DATA	
Light source	LED
Light colour	Green Red Yellow
Optical signal image	Permanent
Blink frequency	1 Hz
Service life optical	50,000 h maximum

APPROVAL DATA

! For additional installation and mounting information, refer to the appropriate user guide at www.werma.com. This printed copy is for information only and is subject to alteration.

Modular Signal Towers / KombiSIGN 72

KS72 Design BM 24VAC/DC GN/YE/RD

Conforms with CE	Yes (through the components)
Conforms with RoHS directive	Fulfills substance restriction
WEEE	Yes
Conforms with ATEX-directive	No
Conforms with CCC	No
Conforms with UL	cULus (all individual items)
Conforms with FCC	No
Conforms with ISED	No
EAC certificate available	No
Conforms with UKCA (Importer)	No
Conforms with CMIM	No
Conforms with AS-I	No
ICAO Certification	No
Conforms with DNV	No
Conforms with RoHS CN	No
Conforms with VdS	No

! For additional installation and mounting information, refer to the appropriate user guide at www.werma.com. This printed copy is for information only and is subject to alteration.

Modular Signal Towers / KombiSIGN 72

KS72 Design BM 24VAC/DC GN/YE/RD

DRAWING

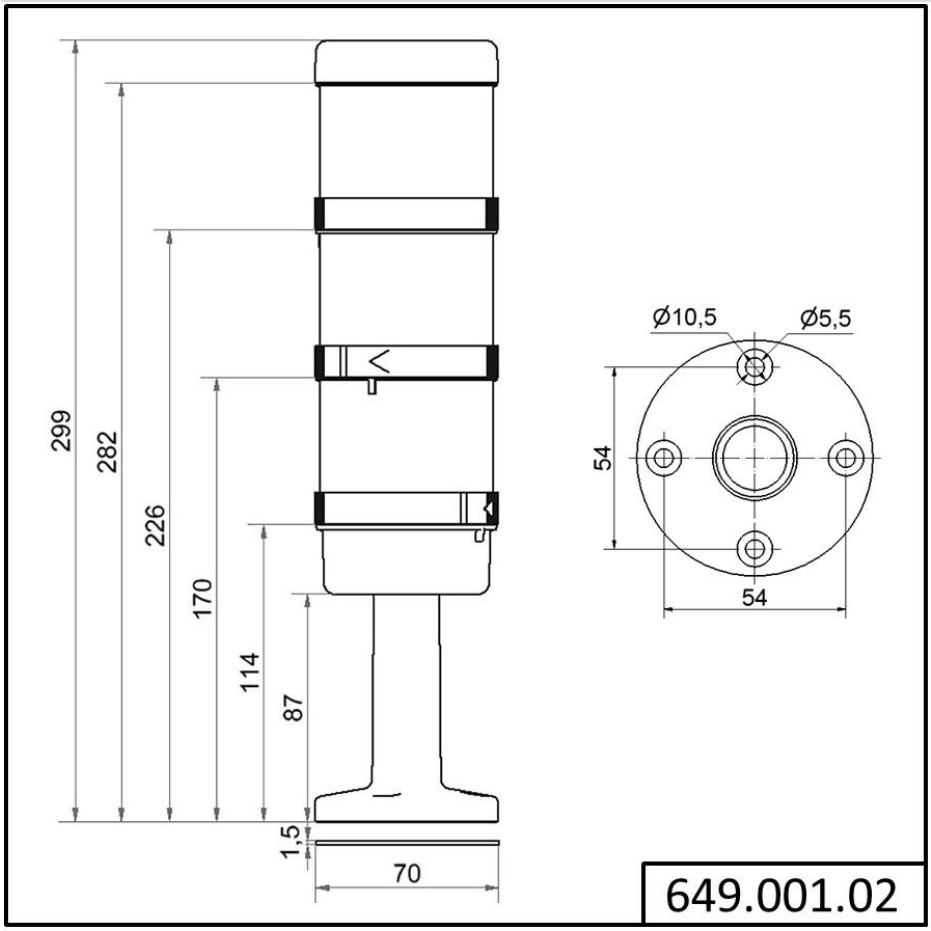

! For additional installation and mounting information, refer to the appropriate user guide at www.werma.com. This printed copy is for information only and is subject to alteration.