Modular Signal Towers / KombiSIGN 72

# KS72 Design BWM 24VAC/DC GN/YE/RD



| | |
|---|---|
| **Part No.:** | **649.001.01** |
| **Series:** | **KombiSIGN 72** |

| **MECHANICAL DATA** | |
|---|---|
| Height | 212 mm |
| Diameter | 70 mm |
| Materials | PA-GF<br>PC |
| Dome colour | Clear |
| Housing colour | Silver |
| Protection category | IP65 |
| Connection | Spring-type terminal |
| cross-sectional area minimum | 0,25mm² / 24AWG |
| cross-sectional area maximum | 1,50mm² / 16AWG |
| Cable entry | Through hole |
| Cable entry maximum | d = 11 mm |
| Tension relief | Not present |
| Type of fixing | Base mounting<br>Wall mounting |
| Working temperature minimum | -20°C |
| Working temperature maximum | +50°C |
| Weight with packaging | 371 g |
| Product weight | 314 g |

| **ELECTRICAL DATA** | |
|---|---|
| Operating voltage | 24V |
| Operating voltage type | AC/DC |
| Operating voltage frequency | 50Hz |
| Operating voltage tolerance | +/- 10% |
| Rated operational voltage | 24 VDC |
| Rated operational current | 240 mA |
| Rated inrush current | <500mA |
| Protection class | Protection class 3 |
| Pollution degree | 3 |

| **OPTICAL DATA** | |
|---|---|
| Light source | LED |
| Light colour | Green<br>Red<br>Yellow |
| Optical signal image | Permanent |
| Blink frequency | 1 Hz |
| Service life optical | 50,000 h maximum |

! For additional installation and mounting information, refer to the appropriate user guide at www.werma.com. This printed copy is for information only and is subject to alteration.

Modular Signal Towers / KombiSIGN 72

# KS72 Design BWM 24VAC/DC GN/YE/RD

| APPROVAL DATA | |
|---|---|
| Conforms with CE | Yes (through the components) |
| Conforms with RoHS directive | Fulfills substance restriction |
| WEEE | Yes |
| Conforms with ATEX-directive | No |
| Conforms with CCC | No |
| Conforms with UL | cULus (all individual items) |
| Conforms with FCC | No |
| Conforms with ISED | No |
| EAC certificate available | No |
| Conforms with UKCA (Importer) | No |
| Conforms with CMIM | No |
| Conforms with AS-I | No |
| ICAO Certification | No |
| Conforms with DNV | No |
| Conforms with RoHS CN | No |
| Conforms with VdS | No |

! For additional installation and mounting information, refer to the appropriate user guide at www.werma.com. This printed copy is for information only and is subject to alteration.

Modular Signal Towers / KombiSIGN 72

# KS72 Design BWM 24VAC/DC GN/YE/RD

**DRAWING**

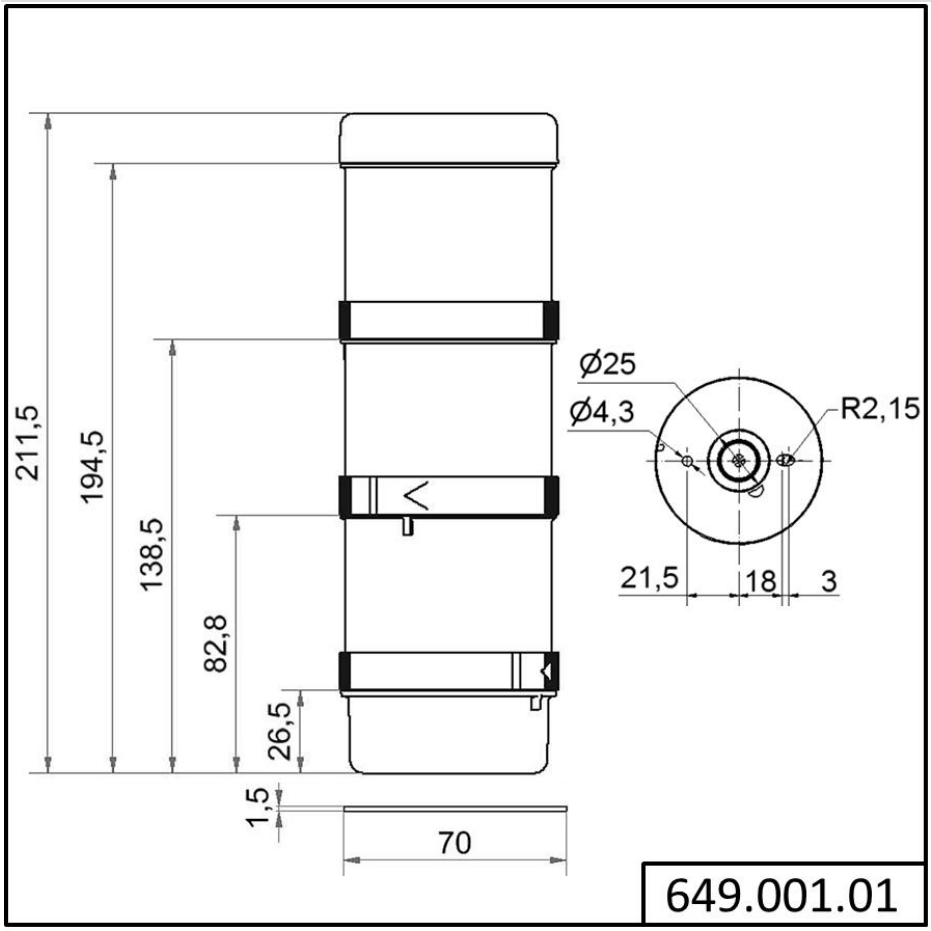


! For additional installation and mounting information, refer to the appropriate user guide at www.werma.com. This printed copy is for information only and is subject to alteration.