LineLIGHT Fusion 700 24V RGB Clip



Part No.:	**300.100.31**
Series:	**LineLIGHT**

MECHANICAL DATA	
Length	745 mm
Width	33 mm
Height	23 mm
Materials	Aluminium PC Stainless steel
Dome colour	Translucent
Housing colour	Black
Protection category	IP54 IP65
Connection	M12 plug 5-pole
Type of fixing	Built-in mounting
Working temperature minimum	-30°C
Working temperature maximum	+50°C
Weight with packaging	693 g
Product weight	550 g
Min. Tightening torque	0.3Nm
Max. Tightening torque	0.6Nm

ELECTRICAL DATA	
Operating voltage	24V
Operating voltage type	DC
Operating voltage tolerance	+/- 10%
Rated operational voltage	24 VDC
Rated operational current	425 mA
Protection class	Protection class 3
Pollution degree	3 In the connection area: 2
Overvoltage category	I

OPTICAL DATA	
Light source	LED
Light colour	MC 7 colours
Optical signal image	Permanent
Length illuminated area (mm)	700
Service life optical	50,000 h maximum

APPROVAL DATA	
Conforms with CE	Yes
Conforms with RoHS directive	Yes

! For additional installation and mounting information, refer to the appropriate user guide at www.werma.com. This printed copy is for information only and is subject to alteration.

LineLIGHT Fusion 700 24V RGB Clip

WEEE	Yes
Conforms with RED directive	No
Conforms with ATEX-directive	No
Conforms with CCC-Ex	No
Conforms with CCC	No
Conforms with UL	No
Conforms with FCC	No
Conforms with ISED	No
EAC certificate available	No
Conforms with UKCA (Importer)	Yes (WERMA (UK) Ltd.)
Conforms with CMIM	No
Conforms with AS-I	No
Conforms with DNV	No
Conforms with RoHS CN	25 years
Conforms with VdS	No

! For additional installation and mounting information, refer to the appropriate user guide at www.werma.com. This printed copy is for information only and is subject to alteration.

LineLIGHT Fusion 700 24V RGB Clip

DRAWING

Article number	L* (mm)	Clip * (Pcs)
300 100 05 , 300 100 65	200	2
300 100 17 , 300 100 67	300	3
300 100 21	400	4
300 100 09	500	5
300 100 27 , 300 100 69	600	6
300 100 31	700	7
300 100 35	800	8
300 100 39 , 300 100 71	900	9
300 100 43	1000	10
300 100 47	1100	11
300 100 51 , 300 100 73	1200	12
300 100 55	1300	13
300 100 59	1400	14
300 100 63 , 300 100 75	1500	15

* L : Length illuminated Area.
* Clip : Needed Quantity of **Clips** to ensure IP65.

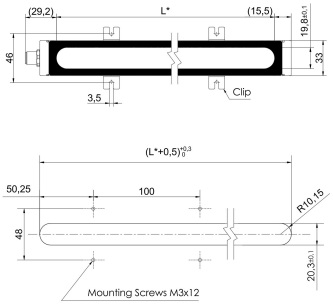

If IP65 is not needed, the amount of clips can be reduced and spacing distance can be user-defined.

Unit:mm

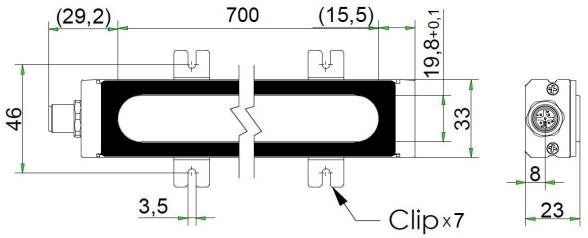

Mounting Diagram_Clip

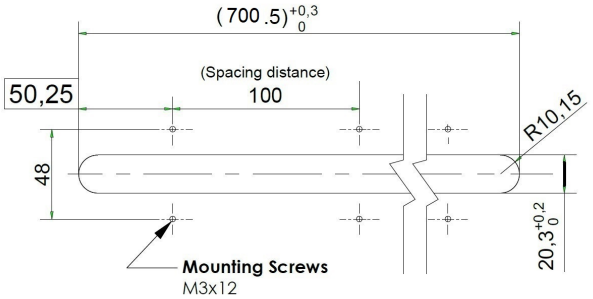

If IP65 is not needed,
the amount of **Clip** can be Reduced.
And **Spacing distance** can user-defined.

! For additional installation and mounting information, refer to the appropriate user guide at www.werma.com. This printed copy is for information only and is subject to alteration.