LineLIGHT Fusion 500 24V RGB Clip A



Part No.:	**300.100.10**
Series:	**LineLIGHT**

MECHANICAL DATA	
Length	545 mm
Width	33 mm
Height	23 mm
Materials	ABS Aluminium PC Stainless steel
Dome colour	Translucent
Housing colour	Black
Protection category	IP54 IP65
Connection	M12 plug 5-pole
Type of fixing	Built-in mounting
Working temperature minimum	-30°C
Working temperature maximum	+50°C
Weight with packaging	529 g
Product weight	414 g
Min. Tightening torque	0.3Nm
Max. Tightening torque	0.6Nm

ELECTRICAL DATA	
Operating voltage	24V
Operating voltage type	DC
Operating voltage tolerance	+/- 10%
Rated operational voltage	24 VDC
Rated operational current	330 mA
Protection class	Protection class 3
Pollution degree	3 In the connection area: 2
Overvoltage category	I

OPTICAL DATA	
Light source	LED
Light colour	MC 7 colours
Optical signal image	Permanent
Length illuminated area (mm)	500
Service life optical	50,000 h maximum

ACOUSTIC DATA	
Volume (max) at 1m distance	85 dB(A)

! For additional installation and mounting information, refer to the appropriate user guide at www.werma.com. This printed copy is for information only and is subject to alteration.

LineLIGHT Fusion 500 24V RGB Clip A

Acoustic signal image	Pulse tone
Number of tones	1 tone
Audio frequency	3850 Hz
Acoustic service life	5,000 h maximum

APPROVAL DATA	
Conforms with CE	Yes
Conforms with RoHS directive	Yes
WEEE	Yes
Conforms with RED directive	No
Conforms with ATEX-directive	No
Conforms with CCC-Ex	No
Conforms with CCC	No
Conforms with UL	No
Conforms with FCC	No
Conforms with ISED	No
EAC certificate available	No
Conforms with UKCA (Importer)	Yes (WERMA (UK) Ltd.)
Conforms with CMIM	No
Conforms with AS-I	No
Conforms with DNV	No
Conforms with RoHS CN	10 years
Conforms with VdS	No

DRAWING

Article number	L* (mm)	Clip * (Pcs)
300 100 06 , 300 100 66	200	2
300 100 18 , 300 100 68	300	3
300 100 22	400	4
300 100 10	500	5
300 100 28 , 300 100 70	600	6
300 100 32	700	7
300 100 36	800	8
300 100 40 , 300 100 72	900	9
300 100 44	1000	10
300 100 48	1100	11
300 100 52 , 300 100 74	1200	12
300 100 56	1300	13
300 100 60	1400	14
300 100 64 , 300 100 76	1500	15

* L : Length illuminated Area.
* Clip : Needed Quantity of **Clips** to ensure IP65.

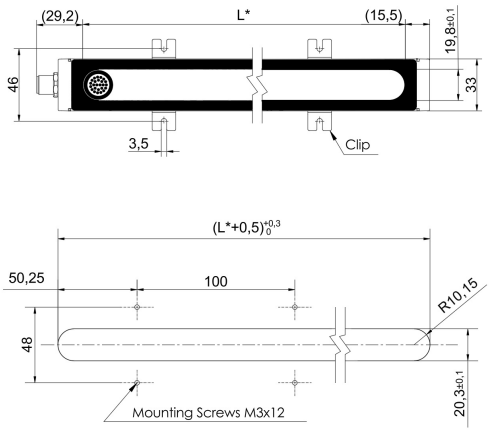

If IP65 is not needed, the amount of clips can be reduced and spacing distance can be user-defined.

! For additional installation and mounting information, refer to the appropriate user guide at www.werma.com. This printed copy is for information only and is subject to alteration.