Signal Beacons and Traffic Lights / Signal lights

LineLIGHT Fusion 100 24V RGB Clip



Part No.:	**300.100.01**
Series:	**LineLIGHT**

MECHANICAL DATA	
Length	145 mm
Width	33 mm
Height	23 mm
Materials	Aluminium PC Stainless steel
Dome colour	Translucent
Housing colour	Black
Protection category	IP54 IP65
Connection	M12 plug 5-pole
Type of fixing	Built-in mounting
Working temperature minimum	-30°C
Working temperature maximum	+50°C
Weight with packaging	153 g
Product weight	105 g
Min. Tightening torque	0.3Nm
Max. Tightening torque	0.6Nm

ELECTRICAL DATA	
Operating voltage	24V
Operating voltage type	DC
Operating voltage tolerance	+/- 10%
Rated operational voltage	24 VDC
Rated operational current	110 mA
Protection class	Protection class 3
Pollution degree	3 In the connection area: 2
Overvoltage category	I

OPTICAL DATA	
Light source	LED
Light colour	MC 7 colours
Optical signal image	Permanent
Length illuminated area (mm)	100
Service life optical	50,000 h maximum

APPROVAL DATA	
Conforms with CE	Yes
Conforms with RoHS directive	Yes

! For additional installation and mounting information, refer to the appropriate user guide at www.werma.com. This printed copy is for information only and is subject to alteration.

Signal Beacons and Traffic Lights / Signal lights

LineLIGHT Fusion 100 24V RGB Clip

WEEE	Yes
Conforms with RED directive	No
Conforms with ATEX-directive	No
Conforms with CCC-Ex	No
Conforms with CCC	No
Conforms with UL	No
Conforms with FCC	No
Conforms with ISED	No
EAC certificate available	No
Conforms with UKCA (Importer)	Yes (WERMA (UK) Ltd.)
Conforms with CMIM	No
Conforms with AS-I	No
Conforms with DNV	No
Conforms with RoHS CN	25 years
Conforms with VdS	No

DRAWING

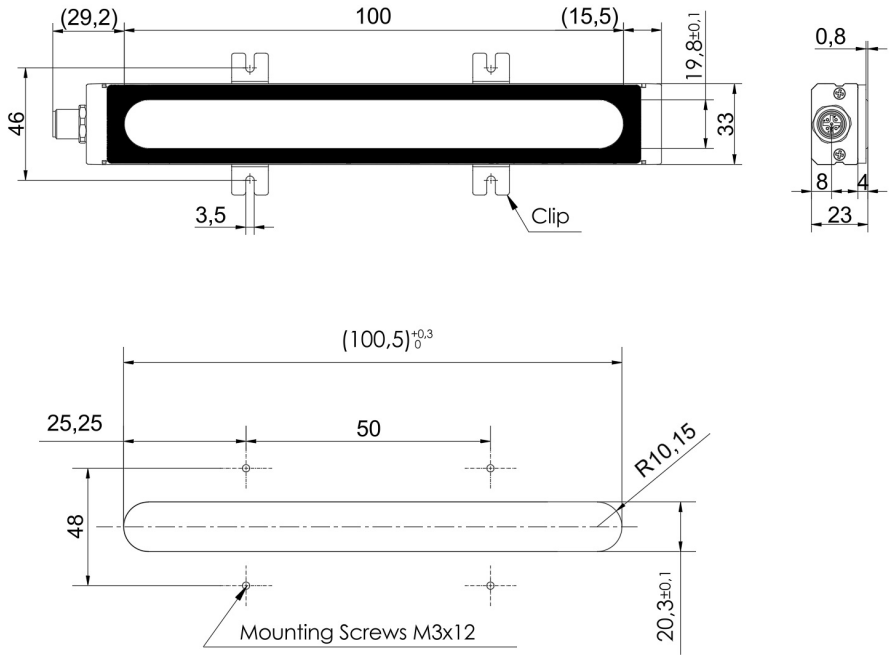

If IP65 is not needed, the amount of clips can be reduced and spacing distance can be user-defined.

! For additional installation and mounting information, refer to the appropriate user guide at www.werma.com. This printed copy is for information only and is subject to alteration.