Obstruction lights / LED Obstruction light 281

LED Obstruction light BM 230VAC RD



Part No.:	281.480.68

MECHANICAL DATA	
Height	205 mm
Diameter	165 mm
Materials	Aluminium Glass
Dome colour	Clear
Housing colour	Black Red
Protection category	IP66 IP68
Connection	Screw terminals
cross-sectional area maximum	1,50mm² / 16AWG
Cable entry	Screwed cable gland
Cable entry minimum	d = 9 mm
Tension relief	Present (conforms to VDE)
Type of fixing	Base mounting
Working temperature minimum	-30°C
Working temperature maximum	+50°C
Weight with packaging	2114 g
Product weight	1891 g

ELECTRICAL DATA	
Operating voltage	230V
Operating voltage type	AC
Operating voltage frequency	50Hz
Operating voltage tolerance	+/- 10%
Rated operational voltage	230 VAC
Rated operational current	200 mA
Rated inrush current	2.000 mA
Protection class	Protection class 1
Pollution degree	3
Overvoltage category	II
insulation voltage	Ui = 250V / Uimp = 2500V
monitorable	prep. for external monitoring

OPTICAL DATA	
Light source	LED
Light colour	Red
Optical signal image	Permanent
Light Intensity	>32cd

! For additional installation and mounting information, refer to the appropriate user guide at www.werma.com. This printed copy is for information only and is subject to alteration.

Obstruction lights / LED Obstruction light 281

LED Obstruction light BM 230VAC RD

Service life optical	50,000 h maximum

APPROVAL DATA	
Conforms with CE	Yes
Conforms with RoHS directive	Yes
WEEE	Yes
Conforms with ATEX-directive	No
Conforms with CCC	No
Conforms with UL	No
Conforms with FCC	No
Conforms with ISED	No
EAC certificate available	No
Conforms with UKCA (Importer)	Yes (WERMA (UK) Ltd.)
Conforms with CMIM	No
Conforms with AS-I	No
ICAO Certification	Yes (Low Intensity Type A, B)
Conforms with DNV	No
Conforms with RoHS CN	No
Conforms with VdS	No

! For additional installation and mounting information, refer to the appropriate user guide at www.werma.com. This printed copy is for information only and is subject to alteration.

Obstruction lights / LED Obstruction light 281

LED Obstruction light BM 230VAC RD

DRAWING

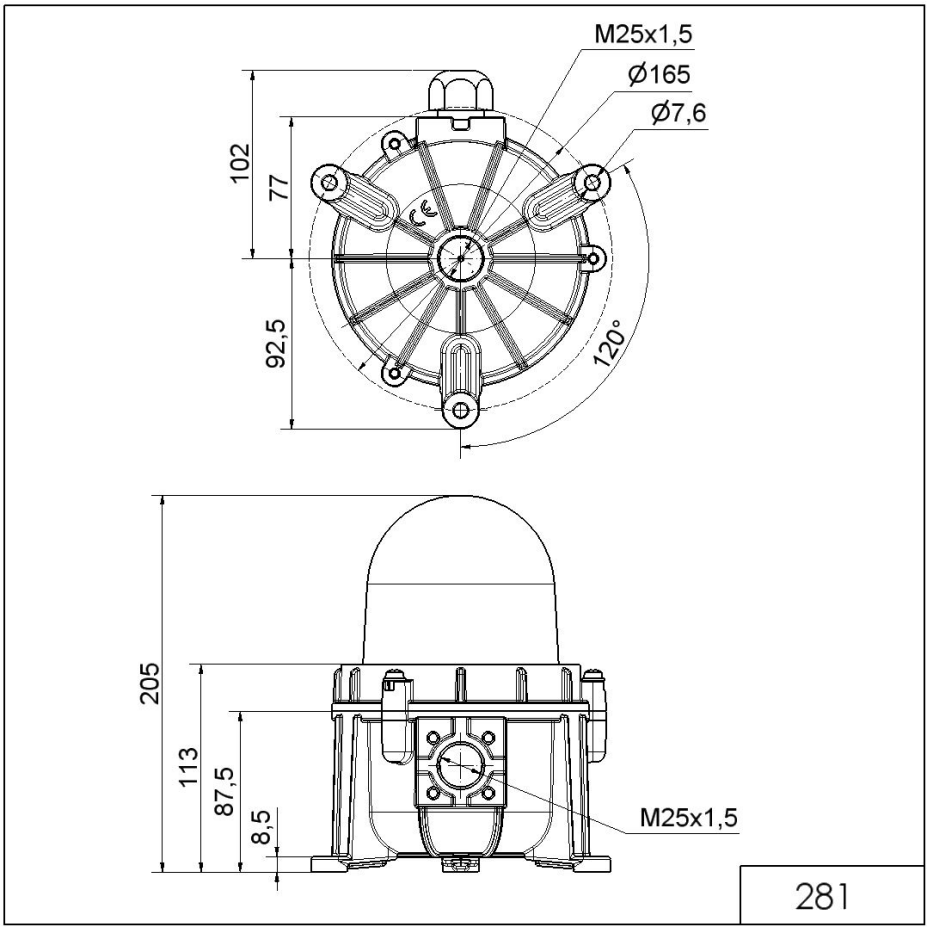

! For additional installation and mounting information, refer to the appropriate user guide at www.werma.com. This printed copy is for information only and is subject to alteration.