Obstruction lights / LED Obstruction Light 280

# LED Obstruction light BM 12-50VDC RD



**Part No.: 280.410.55**

| MECHANICAL DATA | |
|---|---|
| Height | 218 mm |
| Diameter | 142 mm |
| Materials | PC<br>PC/ABS |
| Dome colour | Clear |
| Housing colour | Black |
| Protection category | IP65 |
| Connection | Screw terminals |
| cross-sectional area maximum | 2,50mm² / 14AWG |
| Cable entry | Rubber pinch |
| Cable entry minimum | d = 5 mm |
| Cable entry maximum | d = 7 mm |
| Type of fixing | Base mounting |
| Working temperature minimum | -30°C |
| Working temperature maximum | +50°C |
| Weight with packaging | 602 g |
| Product weight | 515 g |

| ELECTRICAL DATA | |
|---|---|
| Operating voltage | 12-50V |
| Operating voltage type | DC |
| Operating voltage tolerance | +/- 0% |
| Rated operational voltage | 24 VDC |
| Rated operational current | 500 mA |
| Rated inrush current | 2.000 mA |
| Protection class | Protection class 2 |
| Pollution degree | 3 |

| OPTICAL DATA | |
|---|---|
| Light source | LED |
| Light colour | Red |
| Optical signal image | Permanent |
| Light Intensity | >10cd |
| Service life optical | 50,000 h maximum |

| APPROVAL DATA | |
|---|---|
| Conforms with CE | Yes |
| Conforms with RoHS directive | Yes |
| WEEE | Yes |

! For additional installation and mounting information, refer to the appropriate user guide at www.werma.com. This printed copy is for information only and is subject to alteration.

Obstruction lights / LED Obstruction Light 280

# LED Obstruction light BM 12-50VDC RD

| | |
|---|---|
| Conforms with ATEX-directive | No |
| Conforms with CCC | No |
| Conforms with UL | No |
| Conforms with FCC | No |
| Conforms with ISED | No |
| EAC certificate available | No |
| Conforms with UKCA (Importer) | Yes (WERMA (UK) Ltd.) |
| Conforms with AS-I | No |
| ICAO Certification | Yes (Low Intensity Type A) |
| Conforms with DNV | No |
| Conforms with RoHS CN | No |
| Conforms with VdS | No |

! For additional installation and mounting information, refer to the appropriate user guide at www.werma.com. This printed copy is for information only and is subject to alteration.

Obstruction lights / LED Obstruction Light 280

# LED Obstruction light BM 12-50VDC RD

**DRAWING**

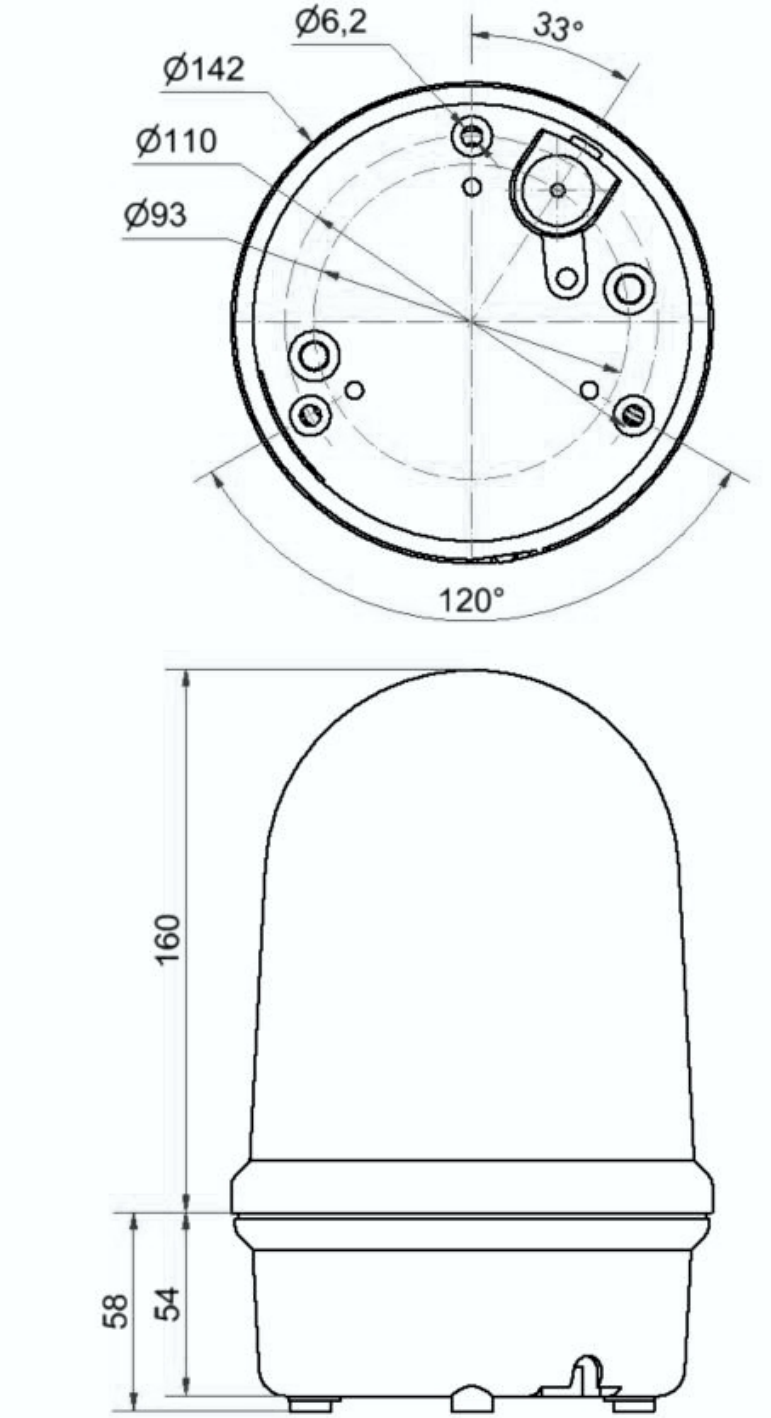


! For additional installation and mounting information, refer to the appropriate user guide at www.werma.com. This printed copy is for information only and is subject to alteration.