EvoSIGNAL / EvoSIGNAL Accessories

Midi Bracket GY

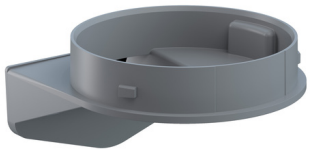

Part No.:	**261.700.07**
Series:	**EvoSIGNAL**

MECHANICAL DATA	
Length	90 mm
Width	85 mm
Height	53 mm
Materials	PC/ABS
Housing colour	Grey
Protection category	IP66
Cable entry	Through hole
Cable entry maximum	d = 9 mm
Type of fixing	Wall mounting
Working temperature minimum	-30°C
Working temperature maximum	+60°C
Weight with packaging	54 g
Product weight	54 g

ELECTRICAL DATA	
Pollution degree	3

APPROVAL DATA	
Conforms with CE	No
Conforms with RoHS directive	Fulfills substance restriction
WEEE	No
Conforms with ATEX-directive	No
Conforms with CCC	No
Conforms with UL	cULus
UL Type Rating	Type 12
Conforms with FCC	No
Conforms with ISED	No
EAC certificate available	No
Conforms with UKCA (Importer)	No
Conforms with AS-I	No
ICAO Certification	No
Conforms with DNV	No
Conforms with RoHS CN	No
Conforms with VdS	No

! For additional installation and mounting information, refer to the appropriate user guide at www.werma.com. This printed copy is for information only and is subject to alteration.

EvoSIGNAL / EvoSIGNAL Accessories

Midi Bracket GY

DRAWING

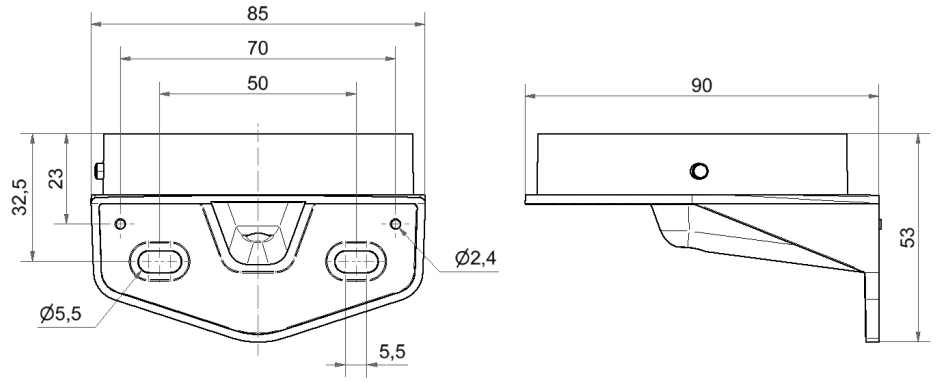

! For additional installation and mounting information, refer to the appropriate user guide at www.werma.com. This printed copy is for information only and is subject to alteration.