EvoSIGNAL / EvoSIGNAL Accessories

Midi Bracket Cable Gland GY

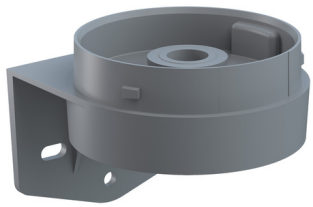

Part No.:	**261.700.06**
Series:	**EvoSIGNAL**

MECHANICAL DATA	
Length	93 mm
Width	85 mm
Height	75 mm
Materials	PC/ABS
Housing colour	Grey
Protection category	IP66
Cable entry	Screwed cable gland
Cable entry minimum	d = 6 mm
Cable entry maximum	d = 12 mm
Tension relief	Present (conforms to VDE)
Type of fixing	Wall mounting
Working temperature minimum	-30°C
Working temperature maximum	+60°C
Weight with packaging	87 g
Product weight	87 g

ELECTRICAL DATA	
Pollution degree	3

APPROVAL DATA	
Conforms with CE	No
Conforms with RoHS directive	Fulfills substance restriction
WEEE	No
Conforms with ATEX-directive	No
Conforms with CCC	No
Conforms with UL	No
Conforms with FCC	No
Conforms with ISED	No
EAC certificate available	No
Conforms with UKCA (Importer)	No
Conforms with AS-I	No
ICAO Certification	No
Conforms with DNV	No
Conforms with RoHS CN	No
Conforms with VdS	No

! For additional installation and mounting information, refer to the appropriate user guide at www.werma.com. This printed copy is for information only and is subject to alteration.

EvoSIGNAL / EvoSIGNAL Accessories

Midi Bracket Cable Gland GY

DRAWING

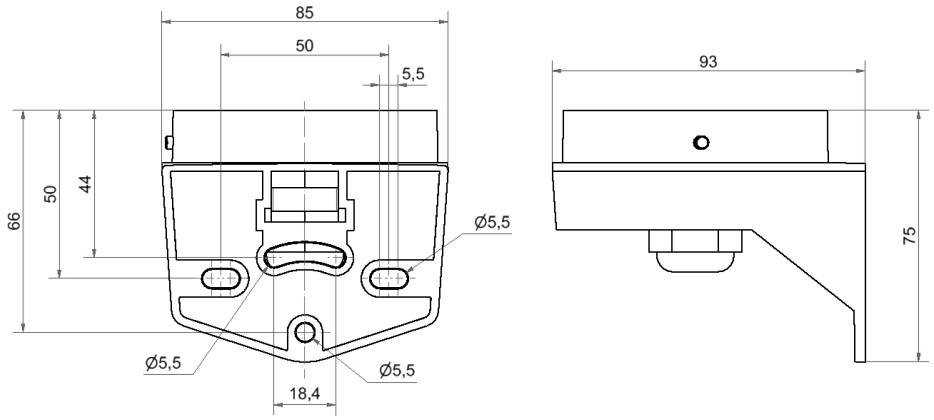

! For additional installation and mounting information, refer to the appropriate user guide at www.werma.com. This printed copy is for information only and is subject to alteration.