Mini / MC55

MC55 RGY Buzzer M12-plug 24VDC



Part No.:	**240.240.55**
Series:	**MC55**

MECHANICAL DATA	
Height	71 mm
Diameter	55 mm
Materials	PC PC/ABS
Dome colour	Translucent
Housing colour	Black
Protection category	IP65
Connection	M12 plug 5-pole
Cable length	100 mm
Tension relief	Pull-out protection
Type of fixing	Built-in mounting
Working temperature minimum	-20°C
Working temperature maximum	+50°C
Weight with packaging	101 g
Product weight	75 g
IK-Code (IEC 62262)	IK06

ELECTRICAL DATA	
Operating voltage	24V
Operating voltage type	DC
Operating voltage tolerance	+/- 10%
Rated operational voltage	24 VDC
Rated operational current	45 mA
Rated inrush current	<150mA
Protection class	Protection class 2
Pollution degree	3 In the connection area: 2
Overvoltage category	I
insulation voltage	Ui = 50V / Uimp = 330V

OPTICAL DATA	
Light source	LED
Light colour	MC 3 colours
Optical signal image	Permanent
Service life optical	50,000 h maximum

ACOUSTIC DATA	
Volume (max) at 1m distance	85 dB(A)
Acoustic signal image	Pulse tone
Number of tones	1 tone

! For additional installation and mounting information, refer to the appropriate user guide at www.werma.com. This printed copy is for information only and is subject to alteration.

Mini / MC55

MC55 RGY Buzzer M12-plug 24VDC

Audio frequency	3400 Hz
Acoustic service life	5,000 h maximum

APPROVAL DATA	
Conforms with CE	Yes
Conforms with RoHS directive	Yes
WEEE	Yes
Conforms with RED directive	No
Conforms with ATEX-directive	No
Conforms with CCC	No
Conforms with UL	No
Conforms with FCC	No
Conforms with ISED	No
EAC certificate available	No
Conforms with UKCA (Importer)	Yes (WERMA (UK) Ltd.)
Conforms with CMIM	No
Conforms with AS-I	No
ICAO Certification	No
Conforms with DNV	No
Conforms with RoHS CN	10 years
Conforms with VdS	No
MTTFd-value [years]	172

! For additional installation and mounting information, refer to the appropriate user guide at www.werma.com. This printed copy is for information only and is subject to alteration.

Mini / MC55

MC55 RGY Buzzer M12-plug 24VDC

DRAWING

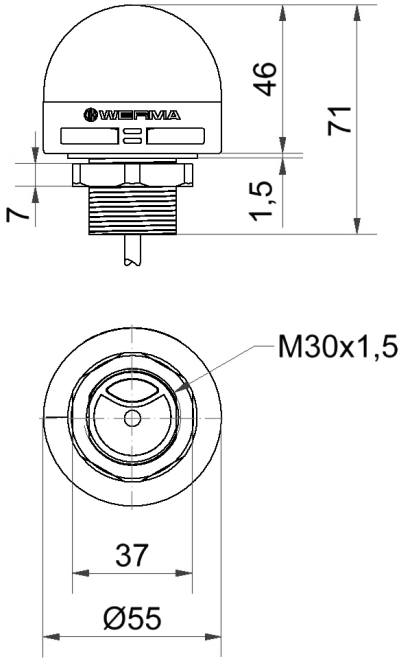

! For additional installation and mounting information, refer to the appropriate user guide at www.werma.com. This printed copy is for information only and is subject to alteration.