Mini / MC55

MC55 RGB Blinking Buzzer Cable 10-30VDC



Part No.:	**240.130.50**
Series:	**MC55**

MECHANICAL DATA	
Height	71 mm
Diameter	55 mm
Materials	PC PC/ABS
Dome colour	Translucent
Housing colour	Black
Protection category	IP65
Connection	Cable
Cable length	1450 mm
Tension relief	Pull-out protection
Type of fixing	Built-in mounting
Working temperature minimum	-20°C
Working temperature maximum	+50°C
Weight with packaging	142 g
Product weight	119 g
IK-Code (IEC 62262)	IK06

ELECTRICAL DATA	
Operating voltage	10-30V
Operating voltage type	DC
Operating voltage tolerance	+/- 0%
Rated operational voltage	24 VDC
Rated operational current	75 mA
Rated inrush current	<1000mA
Protection class	Protection class 2
Pollution degree	3 In the connection area: 2
Overvoltage category	I
insulation voltage	Ui = 50V / Uimp = 330V

OPTICAL DATA	
Light source	LED
Light colour	MC 7 colours
Optical signal image	Blink Permanent
Blink frequency	1 Hz
Service life optical	50,000 h maximum

ACOUSTIC DATA	
Volume (max) at 1m distance	85 dB(A)

! For additional installation and mounting information, refer to the appropriate user guide at www.werma.com. This printed copy is for information only and is subject to alteration.

Mini / MC55

MC55 RGB Blinking Buzzer Cable 10-30VDC

Acoustic signal image	Pulse tone
Number of tones	1 tone
Audio frequency	3400 Hz
Acoustic service life	5,000 h maximum

APPROVAL DATA	
Conforms with CE	Yes
Conforms with RoHS directive	Yes
WEEE	Yes
Conforms with RED directive	No
Conforms with ATEX-directive	No
Conforms with CCC	No
Conforms with UL	No
Conforms with FCC	No
Conforms with ISED	No
EAC certificate available	No
Conforms with UKCA (Importer)	Yes (WERMA (UK) Ltd.)
Conforms with CMIM	No
Conforms with AS-I	No
ICAO Certification	No
Conforms with DNV	No
Conforms with RoHS CN	10 years
Conforms with VdS	No
MTTFd-value [years]	488

! For additional installation and mounting information, refer to the appropriate user guide at www.werma.com. This printed copy is for information only and is subject to alteration.

Mini / MC55

MC55 RGB Blinking Buzzer Cable 10-30VDC

DRAWING

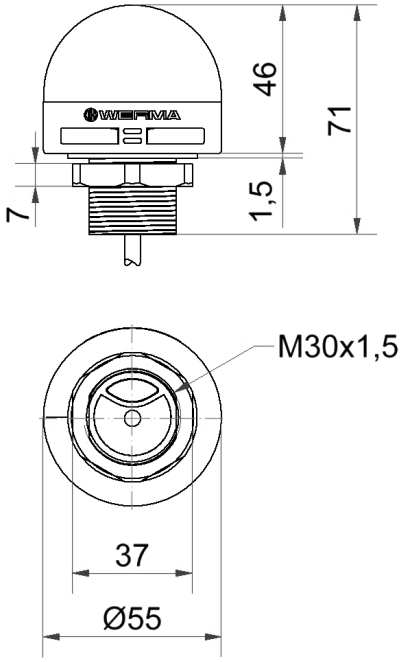

! For additional installation and mounting information, refer to the appropriate user guide at www.werma.com. This printed copy is for information only and is subject to alteration.