Mini installation beacon / AS-i LED Beacon (Multicolour) 239

AS-i LED Beacon EM 24VDC MC



Part No.: 239.780.55

MECHANICAL DATA	
Height	81 mm
Diameter	50 mm
Materials	PC PC/ABS
Dome colour	Clear
Housing colour	Black
Protection category	IP65
Connection	Plug-in connection
cross-sectional area maximum	1,50mm² / 16AWG
Type of fixing	Built-in mounting
Working temperature minimum	-20°C
Working temperature maximum	+50°C
Weight with packaging	53 g
Product weight	36 g

ELECTRICAL DATA	
Operating voltage	24V
Operating voltage type	DC
Operating voltage tolerance	+/- 10%
Rated operational voltage	24 VDC
Rated operational current	100 mA
Rated inrush current	500 mA
Protection class	Protection class 2
Pollution degree	3 In the connection area: 2
AS-i Slave Type	A/B
AS-i Profile	S-8.A.E
connectivity	AS-Interface

OPTICAL DATA	
Light source	LED
Light colour	MC 5 colours
Optical signal image	Permanent
Service life optical	50,000 h maximum

APPROVAL DATA	
Conforms with CE	Yes
Conforms with RoHS directive	Yes
WEEE	Yes
Conforms with ATEX-directive	No

! For additional installation and mounting information, refer to the appropriate user guide at www.werma.com. This printed copy is for information only and is subject to alteration.

Mini installation beacon / AS-i LED Beacon (Multicolour) 239

AS-i LED Beacon EM 24VDC MC

Conforms with CCC	No
Conforms with UL	No
Conforms with FCC	No
Conforms with ISED	No
EAC certificate available	No
Conforms with UKCA (Importer)	Yes (WERMA (UK) Ltd.)
Conforms with CMIM	No
Conforms with AS-I	Yes
ICAO Certification	No
Conforms with DNV	No
Conforms with RoHS CN	No
Conforms with VdS	No

DRAWING

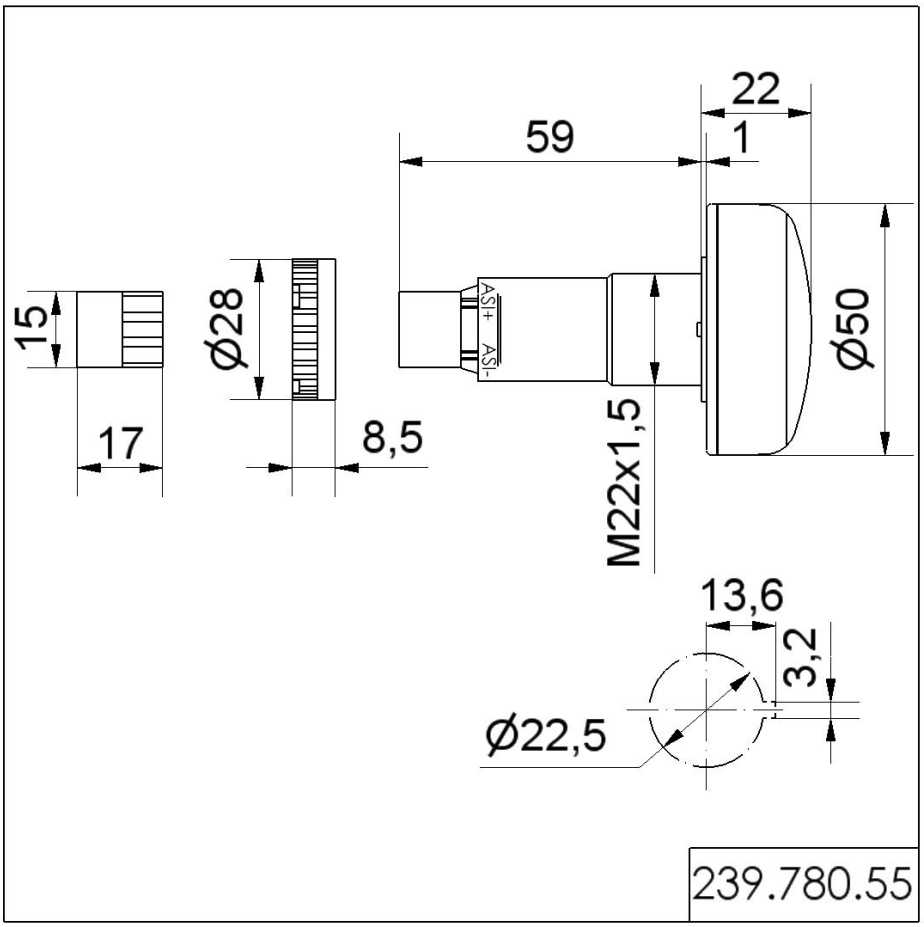

! For additional installation and mounting information, refer to the appropriate user guide at www.werma.com. This printed copy is for information only and is subject to alteration.

Mini installation beacon / AS-i LED Beacon (Multicolour) 239

AS-i LED Beacon EM 24VDC MC

TERMINAL ASSIGNMENT

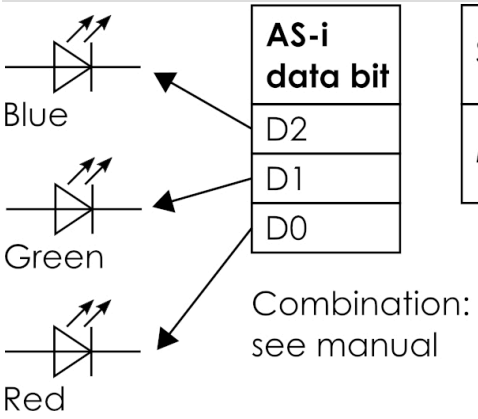

Supply (BUS/AUX)	BUS
Master profile	min. M3

! For additional installation and mounting information, refer to the appropriate user guide at www.werma.com. This printed copy is for information only and is subject to alteration.