Mini installation beacon / AS-i LED Beacon (Multicolour) 239

# LED Beacon EM 24VDC MC



**Part No.: 239.482.55**

| MECHANICAL DATA | |
|---|---|
| Height | 90 mm |
| Diameter | 50 mm |
| Materials | PC<br>PC/ABS |
| Dome colour | Translucent |
| Housing colour | Black |
| Protection category | IP65 |
| Connection | Push-in terminal |
| cross-sectional area minimum | 0,09mm² / 28AWG |
| cross-sectional area maximum | 1,50mm² / 16AWG |
| Type of fixing | Built-in mounting |
| Working temperature minimum | -20°C |
| Working temperature maximum | +50°C |
| Weight with packaging | 53 g |
| Product weight | 37 g |

| ELECTRICAL DATA | |
|---|---|
| Operating voltage | 24V |
| Operating voltage type | DC |
| Operating voltage tolerance | +/- 10% |
| Rated operational voltage | 24 VDC |
| Rated operational current | 75 mA |
| Rated inrush current | 500 mA |
| Protection class | Protection class 2 |
| Pollution degree | 3<br>In the connection area: 2 |

| OPTICAL DATA | |
|---|---|
| Light source | LED |
| Light colour | MC 5 colours |
| Optical signal image | Permanent |
| Service life optical | 50,000 h maximum |

| APPROVAL DATA | |
|---|---|
| Conforms with CE | Yes |
| Conforms with RoHS directive | Yes |
| WEEE | Yes |
| Conforms with ATEX-directive | No |
| Conforms with CCC | No |
| Conforms with UL | No |

! For additional installation and mounting information, refer to the appropriate user guide at www.werma.com. This printed copy is for information only and is subject to alteration.

Mini installation beacon / AS-i LED Beacon (Multicolour) 239

# LED Beacon EM 24VDC MC

| | |
|---|---|
| Conforms with FCC | No |
| Conforms with ISED | No |
| EAC certificate available | No |
| Conforms with UKCA (Importer) | Yes (WERMA (UK) Ltd.) |
| Conforms with CMIM | No |
| Conforms with AS-I | No |
| ICAO Certification | No |
| Conforms with DNV | No |
| Conforms with RoHS CN | No |
| Conforms with VdS | No |

**DRAWING**

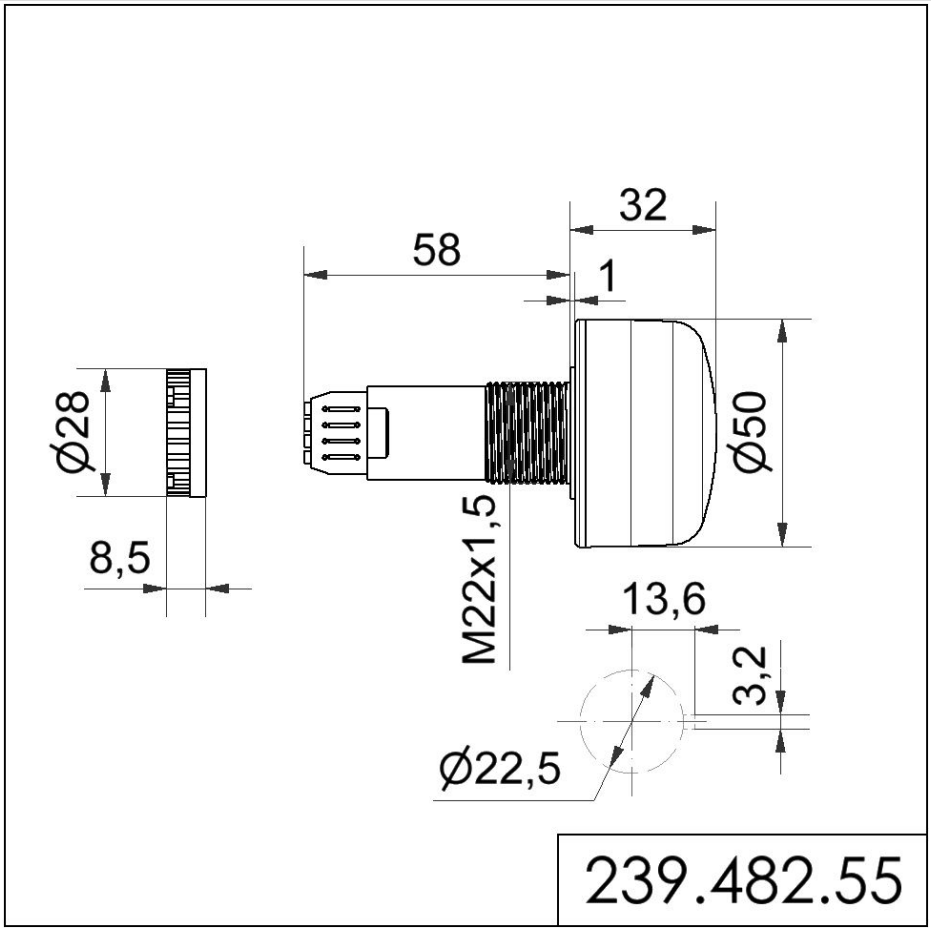


! For additional installation and mounting information, refer to the appropriate user guide at www.werma.com. This printed copy is for information only and is subject to alteration.