Micro installation beacon / LED Beacon 230

# Micro LED Installation Beacon 115VAC CL




| Part No.: | 230.400.67 |
|---|---|

| MECHANICAL DATA | |
|---|---|
| Height | 154 mm |
| Diameter | 29 mm |
| Materials | PC<br>PC/ABS |
| Dome colour | Clear |
| Housing colour | Black |
| Protection category | IP65 |
| Connection | Cable |
| Cable length | 115 mm |
| Type of fixing | Built-in mounting |
| Working temperature minimum | -20°C |
| Working temperature maximum | +50°C |
| Weight with packaging | 17 g |
| Product weight | 12 g |

| ELECTRICAL DATA | |
|---|---|
| Operating voltage | 115V |
| Operating voltage type | AC |
| Operating voltage frequency | 60Hz |
| Operating voltage tolerance | +/- 10% |
| Rated operational voltage | 115 VAC |
| Rated operational current | 15 mA |
| Rated inrush current | 500 mA |
| Protection class | Protection class 2 |
| Pollution degree | 3<br>In the connection area: 2 |
| Overvoltage category | II |
| insulation voltage | Ui = 250V / Uimp = 2500V |

| OPTICAL DATA | |
|---|---|
| Light source | LED |
| Light colour | White |
| Optical signal image | Permanent |
| Service life optical | 100,000 h maximum |

| APPROVAL DATA | |
|---|---|
| Conforms with CE | Yes |
| Conforms with RoHS directive | Yes |
| WEEE | Yes |
| Conforms with ATEX-directive | No |

! For additional installation and mounting information, refer to the appropriate user guide at www.werma.com. This printed copy is for information only and is subject to alteration.

Micro installation beacon / LED Beacon 230

# Micro LED Installation Beacon 115VAC CL

| | |
|---|---|
| Conforms with CCC | No |
| Conforms with UL | cULus |
| UL Type Rating | Type 12 |
| Conforms with FCC | No |
| Conforms with ISED | No |
| EAC certificate available | No |
| Conforms with UKCA (Importer) | Yes (WERMA (UK) Ltd.) |
| Conforms with CMIM | No |
| Conforms with AS-I | No |
| ICAO Certification | No |
| Conforms with DNV | No |
| Conforms with RoHS CN | No |
| Conforms with VdS | No |

## DRAWING

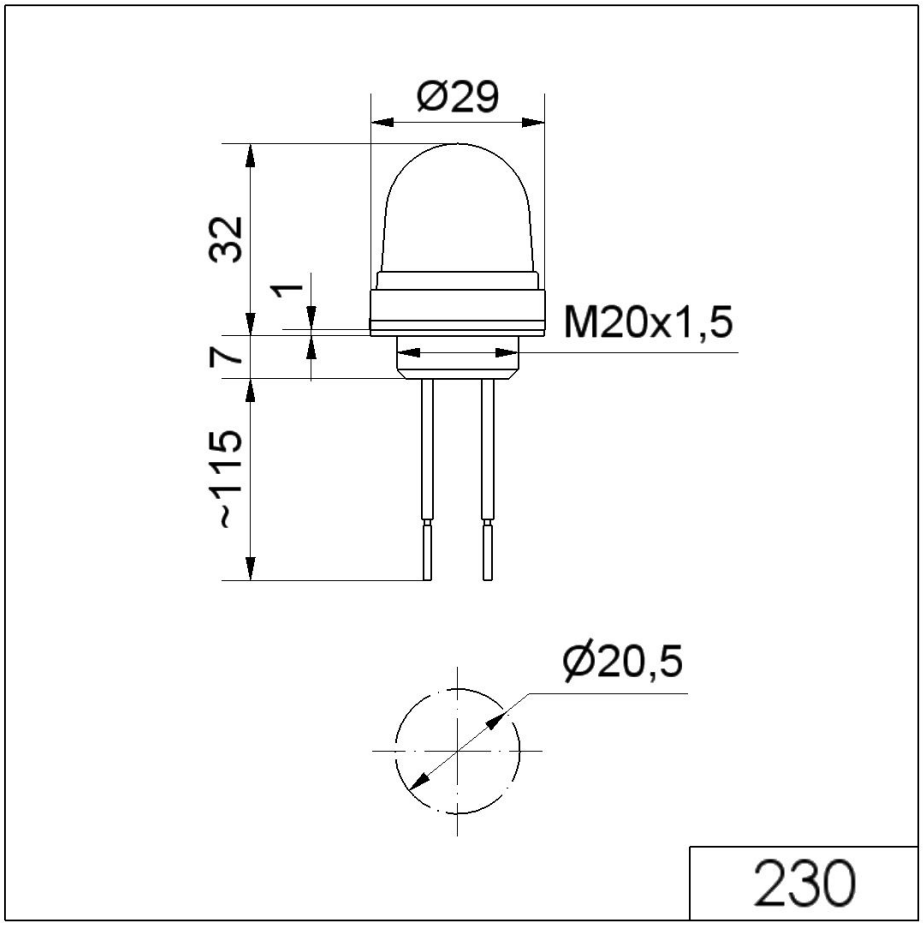


! For additional installation and mounting information, refer to the appropriate user guide at www.werma.com. This printed copy is for information only and is subject to alteration.