Micro installation beacon / LED Beacon 230

Micro LED Installation Beacon 230VAC RD



Part No.: 230.100.68

MECHANICAL DATA	
Height	154 mm
Diameter	29 mm
Materials	PC PC/ABS
Dome colour	Red
Housing colour	Black
Protection category	IP65
Connection	Stranded wires (tinned) Stranded wires with ferrules
Cable length	115 mm
Type of fixing	Built-in mounting
Working temperature minimum	-20°C
Working temperature maximum	+50°C
Weight with packaging	18 g
Product weight	12 g

ELECTRICAL DATA	
Operating voltage	230V
Operating voltage type	AC
Operating voltage frequency	50Hz
Operating voltage tolerance	+/- 10%
Rated operational voltage	230 VAC
Rated operational current	20 mA
Rated inrush current	500 mA
Protection class	Protection class 2
Pollution degree	3 In the connection area: 2
Overvoltage category	II
insulation voltage	Ui = 250V / Uimp = 2500V

OPTICAL DATA	
Light source	LED
Light colour	Red
Optical signal image	Permanent
Service life optical	100,000 h maximum

APPROVAL DATA	
Conforms with CE	Yes
Conforms with RoHS directive	Yes
WEEE	Yes

! For additional installation and mounting information, refer to the appropriate user guide at www.werma.com. This printed copy is for information only and is subject to alteration.

Micro installation beacon / LED Beacon 230

Micro LED Installation Beacon 230VAC RD

Conforms with ATEX-directive	No
Conforms with CCC	Yes
Conforms with UL	cULus
UL Type Rating	Type 12
Conforms with FCC	No
Conforms with ISED	No
EAC certificate available	No
Conforms with UKCA (Importer)	Yes (WERMA (UK) Ltd.)
Conforms with CMIM	No
Conforms with AS-I	No
ICAO Certification	No
Conforms with DNV	No
Conforms with RoHS CN	No
Conforms with VdS	No

DRAWING

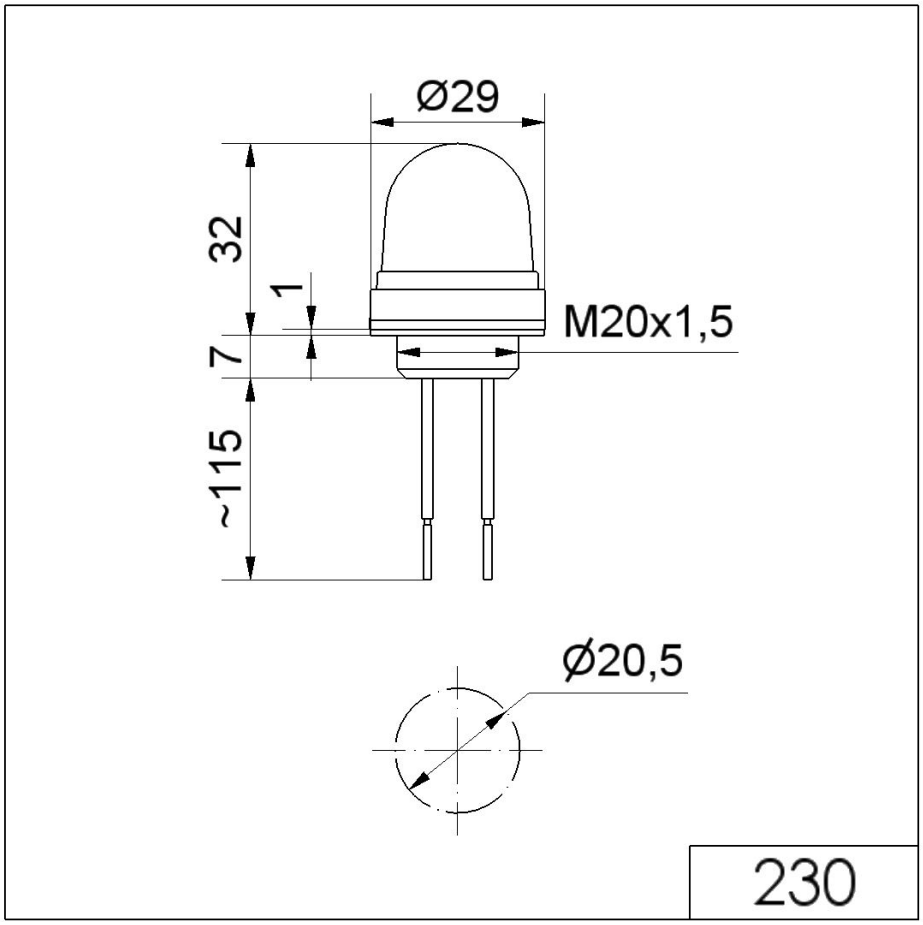

! For additional installation and mounting information, refer to the appropriate user guide at www.werma.com. This printed copy is for information only and is subject to alteration.