Mini installation beacon / Permanent Light 216

Permanent Beacon EM 12-48VAC/DC RD

Part No.: 216.100.00



MECHANICAL DATA	
Height	103 mm
Diameter	57 mm
Materials	PA-GF PC
Dome colour	Red
Housing colour	Black
Protection category	IP65
Connection	Flat plug
Type of fixing	Built-in mounting
Working temperature minimum	-20°C
Working temperature maximum	+50°C
Weight with packaging	67 g
Product weight	45 g

ELECTRICAL DATA	
Operating voltage	12-48V
Operating voltage type	AC/DC
Operating voltage frequency	50Hz
Operating voltage tolerance	+/- 0%
Rated operational voltage	24 VDC
Protection class	Protection class 2
Pollution degree	3 In the connection area: 2

OPTICAL DATA	
Light colour	Red
Service life optical	depends on bulb

APPROVAL DATA	
Conforms with CE	Yes
Conforms with RoHS directive	Yes
WEEE	Yes
Conforms with ATEX-directive	No
Conforms with CCC	No
Conforms with UL	cULus
UL Type Rating	Type 12
Conforms with FCC	No
Conforms with ISED	No
EAC certificate available	No
Conforms with UKCA (Importer)	Yes (WERMA (UK) Ltd.)

! For additional installation and mounting information, refer to the appropriate user guide at www.werma.com. This printed copy is for information only and is subject to alteration.

Mini installation beacon / Permanent Light 216

Permanent Beacon EM 12-48VAC/DC RD

Conforms with AS-I	No
ICAO Certification	No
Conforms with DNV	No
Conforms with RoHS CN	No
Conforms with VdS	No

DRAWING

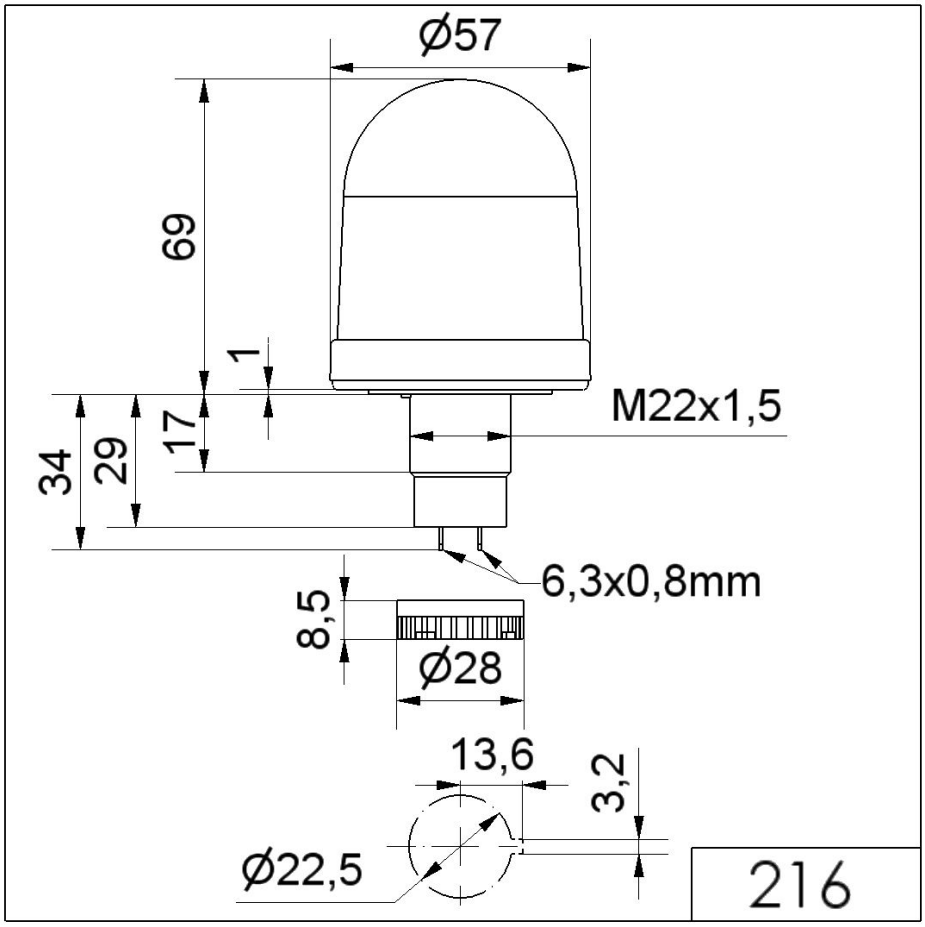

! For additional installation and mounting information, refer to the appropriate user guide at www.werma.com. This printed copy is for information only and is subject to alteration.