Mini installation beacon / Flashing Light 208

Flashing Beacon EM 115VAC BU

Part No.:	208.500.67

MECHANICAL DATA	
Height	103 mm
Diameter	58 mm
Materials	PA-GF PC
Dome colour	Blue
Housing colour	Black
Protection category	IP65
Connection	Flat plug
Type of fixing	Built-in mounting
Working temperature minimum	-20°C
Working temperature maximum	+50°C
Weight with packaging	90 g
Product weight	68 g

ELECTRICAL DATA	
Operating voltage	115V
Operating voltage type	AC
Operating voltage frequency	60Hz
Operating voltage tolerance	+/- 10%
Rated operational voltage	115 VAC
Rated operational current	25 mA
Rated inrush current	500 mA
Protection class	Protection class 2
Pollution degree	3 In the connection area: 2
Overvoltage category	II
insulation voltage	Ui = 250V / Uimp = 2500V

OPTICAL DATA	
Light source	Xenon
Light colour	Blue
Optical signal image	Flash
Flash frequency	0.75 Hz
Flash output	1 J
Service life optical	4 million flashes maximum

APPROVAL DATA	
Conforms with CE	Yes
Conforms with RoHS directive	Yes
WEEE	Yes

! For additional installation and mounting information, refer to the appropriate user guide at www.werma.com. This printed copy is for information only and is subject to alteration.

Mini installation beacon / Flashing Light 208

Flashing Beacon EM 115VAC BU

Conforms with ATEX-directive	No
Conforms with CCC	No
Conforms with UL	cULus
UL Type Rating	Type 12
Conforms with FCC	No
Conforms with ISED	No
EAC certificate available	No
Conforms with UKCA (Importer)	Yes (WERMA (UK) Ltd.)
Conforms with AS-I	No
ICAO Certification	No
Conforms with DNV	No
Conforms with RoHS CN	No
Conforms with VdS	No

DRAWING

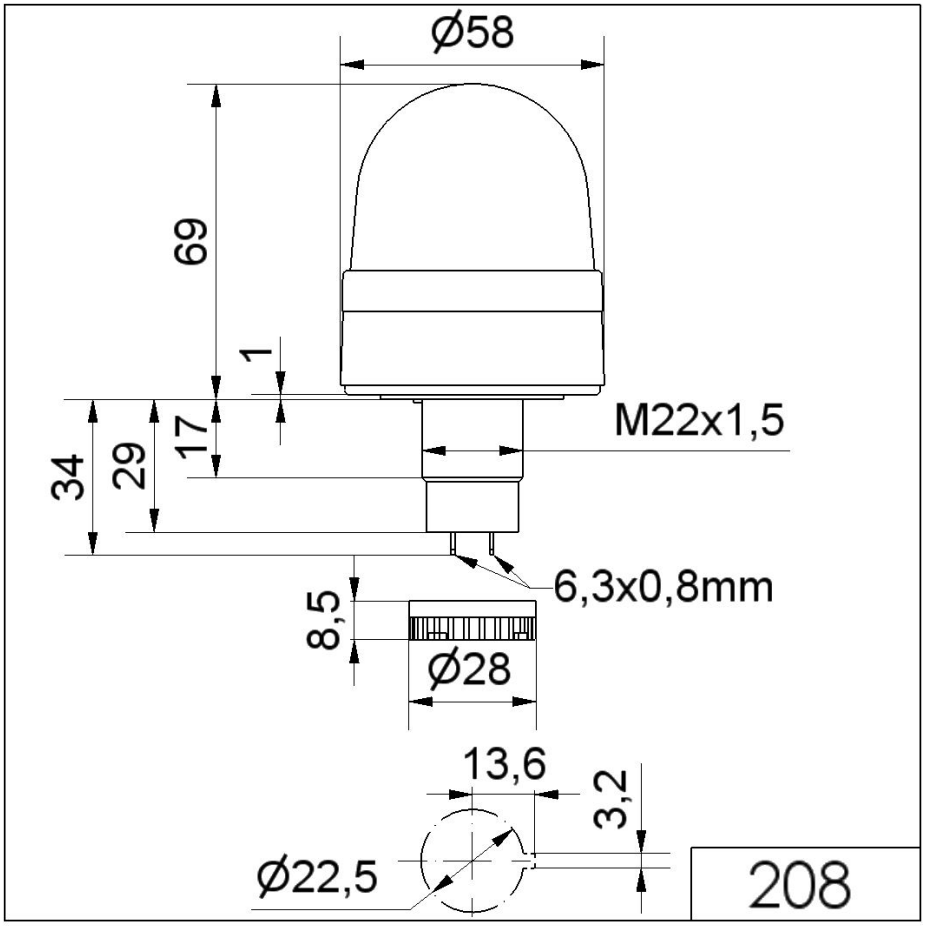

! For additional installation and mounting information, refer to the appropriate user guide at www.werma.com. This printed copy is for information only and is subject to alteration.