Mini installation beacon / Flashing Light 208

Flashing Beacon EM 24VDC YE



Part No.: 208.300.55

MECHANICAL DATA	
Height	103 mm
Diameter	58 mm
Materials	PA-GF PC
Dome colour	Yellow
Housing colour	Black
Protection category	IP65
Connection	Flat plug
Type of fixing	Built-in mounting
Working temperature minimum	-20°C
Working temperature maximum	+50°C
Weight with packaging	95 g
Product weight	73 g

ELECTRICAL DATA	
Operating voltage	24V
Operating voltage type	DC
Operating voltage tolerance	+/- 10%
Rated operational voltage	24 VDC
Rated operational current	100 mA
Rated inrush current	500 mA
Protection class	Protection class 2
Pollution degree	3 In the connection area: 2

OPTICAL DATA	
Light source	Xenon
Light colour	Yellow
Optical signal image	Flash
Flash frequency	0.75 Hz
Flash output	1 J
Service life optical	4 million flashes maximum

APPROVAL DATA	
Conforms with CE	Yes
Conforms with RoHS directive	Yes
WEEE	Yes
Conforms with ATEX-directive	No
Conforms with CCC	No
Conforms with UL	cULus

! For additional installation and mounting information, refer to the appropriate user guide at www.werma.com. This printed copy is for information only and is subject to alteration.

Mini installation beacon / Flashing Light 208

Flashing Beacon EM 24VDC YE

UL Type Rating	Type 12
Conforms with FCC	No
Conforms with ISED	No
EAC certificate available	No
Conforms with UKCA (Importer)	Yes (WERMA (UK) Ltd.)
Conforms with AS-I	No
ICAO Certification	No
Conforms with DNV	No
Conforms with RoHS CN	No
Conforms with VdS	No

DRAWING

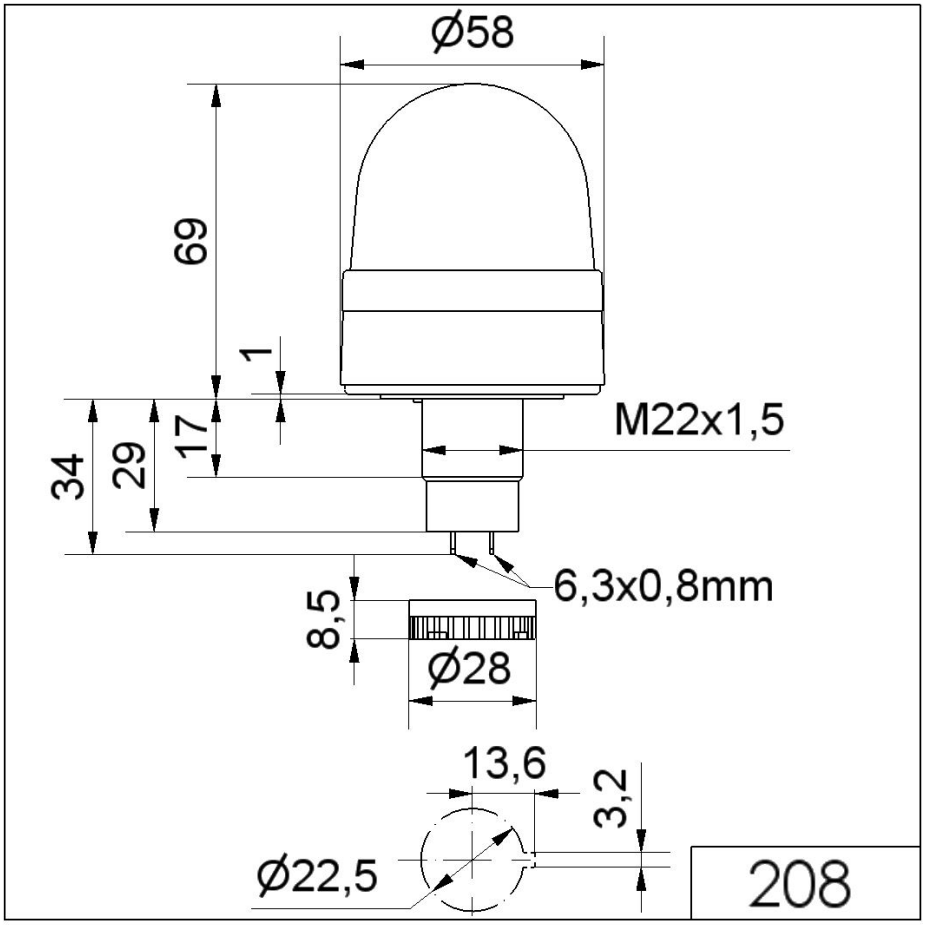

! For additional installation and mounting information, refer to the appropriate user guide at www.werma.com. This printed copy is for information only and is subject to alteration.