Mini free-standing Beacons / Permanent Light 200

Permanent Beacon BM 12-230VAC/DC CL



Part No.: 200.400.00

MECHANICAL DATA	
Height	66 mm
Diameter	57 mm
Materials	PA-GF PC
Dome colour	Clear
Housing colour	Black
Protection category	IP65
Connection	Spring-type terminal
cross-sectional area maximum	2,50mm² / 14AWG
Cable entry	Through hole
Cable entry maximum	d = 10 mm
Type of fixing	Base mounting
Working temperature minimum	-20°C
Working temperature maximum	+50°C
Weight with packaging	69 g
Product weight	47 g

ELECTRICAL DATA	
Operating voltage	12-230V
Operating voltage type	AC/DC
Protection class	Protection class 2
Pollution degree	3
Overvoltage category	II
insulation voltage	Ui = 250V / Uimp = 2500V

OPTICAL DATA	
Light colour	White
Optical signal image	Permanent
Service life optical	depends on bulb
Lamp fitting/socket	B15d

APPROVAL DATA	
Conforms with CE	Yes
Conforms with RoHS directive	Yes
WEEE	Yes
Conforms with ATEX-directive	No
Conforms with CCC	Yes
Conforms with UL	cULus
UL Type Rating	Type 12

! For additional installation and mounting information, refer to the appropriate user guide at www.werma.com. This printed copy is for information only and is subject to alteration.

Mini free-standing Beacons / Permanent Light 200

Permanent Beacon BM 12-230VAC/DC CL

Conforms with FCC	No
Conforms with ISED	No
EAC certificate available	No
Conforms with UKCA (Importer)	Yes (WERMA (UK) Ltd.)
Conforms with AS-I	No
ICAO Certification	No
Conforms with DNV	No
Conforms with RoHS CN	No
Conforms with VdS	No

DRAWING

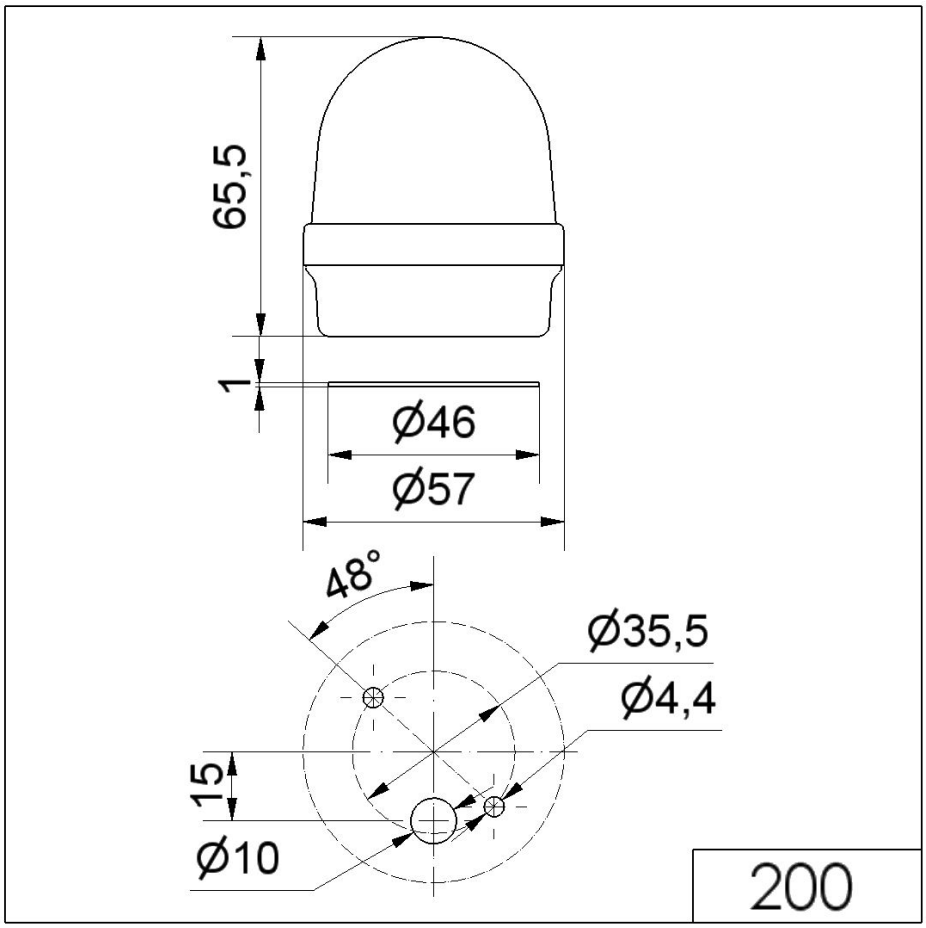

! For additional installation and mounting information, refer to the appropriate user guide at www.werma.com. This printed copy is for information only and is subject to alteration.