10.4” – 21.5” Fanless Panel PC with Intel® Dual Core™ i3-7100U/i5-7300U/i7-7600U Processor

- High Resolution Capacitive Touch Screen
- Multiple Memory and Storage Options Available
- Windows® 10, Windows® 11, Linux® OS Options
- Optional Wi-Fi Upgrade
- Panel or VESA mount
- Integrate with AVEVA EDGE® SCADA Solution

System	**CPU**	Intel® 7th Generation Dual Core™ : i3-7100U @ 2.4GHz i5-7300U @ 2.6GHz i7-7600U @ 2.8GHz			
	System Memory Options	2 x DDR4 260-pin SO-DIMM Non-ECC RAM (4, 8, 16, 32 GB)			
I/O Ports	**USB**	2 x USB 2.0 type A 4 x USB 3.0 type A			
	Serial	1 x RS-232/422/485 DE-9P, COM1 (default RS-232) 3 x RS-232 DE-9P, COM2/COM3/COM4			
	Audio	1 x 3.5 mm Line-out 1 x 3.5 mm Mic-in			
	LAN	2 x GbE RJ-45			
	Power	DC power input jack, thumbscrew secured.			
	Power Switch	1 x Momentary Pushbutton with Integrated LED			
	External Display Connector	1 x DisplayPort 1.2 1 x HDMI® 1.4a			
Storage	**Solid State Drive Options***	1 x 2.5” SATA III, MLC (64, 128, 256, 512 GB, 1TB SSD)			
	SD Card Slot	N/A			
Expansion	**Expansion Slot**	Optional Wi-Fi kit (Wi-Fi card and antenna)			
Touch Screen	**Type**	Projected Capacitive Touch			
	Interface	USB			
Display	**Display Type**	**10.4” TFT XGA LCD**	**12.1” TFT XGA LCD**	**15” TFT XGA LCD**	**15.6” Widescreen TFT FHD LCD**
	Max. Resolution	1024 X 768	1024 X 768	1024 x 768	1920 x 1080
	Max. Color	16.2 M	16.2 M	16.2 M	16.2 M
	Luminance (cd/m²)	350	500	300	450
	View Angle (H°/V°)	170/170	170/170	170/160	170/170
	Contrast Ratio	1000:1	700:1	2000:1	500:1
	Backlight Lifetime (Hours)	50,000+	50,000+	50,000+	50,000+
Electrical	**Input Voltage**	9~24 VDC	9~24 VDC	9~24 VDC	9~24 VDC
	Input Current	1.66~4.44 A	1.71~4.56 A	1.79~4.78 A	1.63~4.33 A
	Input Power	40W	41 W	43 W	39 W
Mechanical	**Dimension (W x H x D)**	11.57 x 8.90 x 3.62” [294 x 226 x 92 mm]	12.48 x 9.65 x 3.62” [317 x 245 x 92 mm]	13.97 x 11.40 x 3.62” [354.9 x 289.5 x 92 mm]	15.75 x 9.84 x 3.36” [400 x 250 x 85.4 mm]
	Net Weight	8.38 lbs [3.8 kg]	9.04 lbs [4.1 kg]	11.46 lbs [5.2 kg]	11.46 lbs [5.2 kg]
	Panel Cutout Dimensions (W x H)	10.63 x 7.95” [270 x 202 mm]	11.54 x 8.70” [293 x 221 mm]	13.03 x 10.47” [331 x 266 mm]	14.57 x 8.90” [370 x 226 mm]
	Mounting	Panel mounting, VESA 100 x 100			
	Construction	Steel Chassis, Aluminum Heatsink and Front Bezel			
	Rating	IP65 compliant front panel, NEMA 4 when panel mounted			
Environmental	**Operating Temperature**	32~140°F [0~60°C]			
	Storage Temperature	-22~175°F [-30~80°C]			
	Storage Humidity	10 to 90% @ 40°C, non-condensing			
	Shock Resistance	10G acceleration peak to peak, 11ms duration			
	Vibration Resistance	5~17 Hz, 0.1” double amplitude peak to peak, 1.5G acceleration peak to peak			
	Certifications	CE / FCC Class B / RoHS			
Operating System	**Microsoft Windows® Options**	Microsoft Windows® 10 IoT Enterprise Embedded LTSC 64-bit (EPKEA) Microsoft Windows® 10 IoT Enterprise LTSC 64-bit (PKEA) Microsoft Windows® 11 IoT Enterprise Embedded GAC 64-bit (EPKEA) Microsoft Windows® 11 IoT Enterprise GAC 64-bit (PKEA) Microsoft Windows® 11 Professional			
	Linux® Options	Linux® Ubuntu Desktop			
Notes	Specifications subject to change without notice.				

PC1300 Series

10.4” – 21.5” Fanless Panel PC with Intel® Dual Core™ i3-7100U/i5-7300U/i7-7600U Processor

- High Resolution Capacitive Touch Screen
- Multiple Memory and Storage Options Available
- Windows® 10, Windows® 11, Linux® OS Options
- Optional Wi-Fi Upgrade
- Panel or VESA mount
- Integrate with AVEVA EDGE® SCADA Solution

System	**CPU**	Intel® 7th Generation Dual Core™ : i3-7100U @ 2.4GHz i5-7300U @ 2.6GHz i7-7600U @ 2.8GHz			
	System Memory Options	2 x DDR4 260-pin SO-DIMM Non-ECC RAM (4, 8, 16, 32 GB)			
I/O Ports	**USB**	2 x USB 2.0 type A 4 x USB 3.0 type A			
	Serial	1 x RS-232/422/485 DE-9P, COM1 (default RS-232) 3 x RS-232 DE-9P, COM2/COM3/COM4			
	Audio	1 x 3.5 mm Line-out 1 x 3.5 mm Mic-in			
	LAN	2 x GbE RJ-45			
	Power	DC power input jack, thumbscrew secured.			
	Power Switch	1 x Momentary Pushbutton with Integrated LED			
	External Display Connector	1 x DisplayPort 1.2 1 x HDMI® 1.4a			
Storage	**Solid State Drive Options***	1 x 2.5” SATA III, MLC (64, 128, 256, 512 GB, 1TB SSD)			
	SD Card Slot	N/A			
Expansion	**Expansion Slot**	Optional Wi-Fi kit (Wi-Fi card and antenna)			
Touch Screen	**Type**	Projected Capacitive Touch			
	Interface	USB			
Display	**Display Type**	**17” TFT SXGA LCD**	**19” TFT SXGA LCD**	**21.5” Widescreen TFT FHD LCD**	**27” TFT XVGA LCD**
	Max. Resolution	1280 x 1024	1280 x 1024	1920 x 1080	1920 x 1080
	Max. Color	16.2 M	16.2 M	16.2 M	16.2 M
	Luminance (cd/m²)	250	350	250	300
	View Angle (H°/V°)	160/160	170/160	170/160	178/178
	Contrast Ratio	1000:1	1000:1	3000:1	1000:1
	Backlight Lifetime (Hours)	50,000+	30,000+	50,000+	30,000+
Electrical	**Input Voltage**	9~24 VDC	9~24 VDC	9~24 VDC	9~24 VDC
	Input Current	1.92~5.11 A	1.98~5.28 A	2.13~5.67 A	2.35~6.27 A
	Input Power	46 W	47.5 W	51 W	56.40 W
Mechanical	**Dimension (W x H x D)**	15.23 x 13.09 x 3.62” [386.9 x 332.5 x 92 mm]	17.44 x 14.49 x 3.44” [443 x 368 x 87.4 mm]	20.63 x 13.00 x 3.62” [524 x 330.2 x 92 mm]	25.77 x 15.54 x 3.38” [654.6 x 394.8 x 85.9 mm]
	Net Weight	13.67 lbs [6.2 kg]	18.52 lbs [8.4 kg]	18.74 lbs [8.5 kg]	20.75 lbs [9.41 kg]
	Panel Cutout Dimensions (W x H)	14.29 x 12.17” [363 x 309 mm]	16.69 x 13.82” [424 x 351 mm]	19.69 x 12.09” [500 x 307 mm]	24.69 x 14.45” [627 x 367 mm]
	Mounting	Panel mounting, VESA 100 x 100			
	Construction	Black Steel Chassis, Aluminum Heatsink			
	Rating	IP65 compliant front panel, NEMA 4 when panel mounted			
Environmental	**Operating Temperature**	32~140°F [0~60°C]			
	Storage Temperature	-22~175°F [-30~80°C]			
	Storage Humidity	10 to 90% @ 40°C, non-condensing			
	Shock Resistance	10G acceleration peak to peak, 11ms duration			
	Vibration Resistance	5~17 Hz, 0.1” double amplitude peak to peak, 1.5G acceleration peak to peak			
	Certifications	CE / FCC Class B / RoHS			
Operating System	**Microsoft Windows® Options**	Microsoft Windows® 10 IoT Enterprise Embedded LTSC 64-bit (EPKEA) Microsoft Windows® 10 IoT Enterprise LTSC 64-bit (PKEA) Microsoft Windows® 11 IoT Enterprise Embedded GAC 64-bit (EPKEA) Microsoft Windows® 11 IoT Enterprise GAC 64-bit (PKEA) Microsoft Windows® 11 Professional			
	Linux® Options	Linux® Ubuntu Desktop			
Notes	Specifications subject to change without notice.				

PC1310

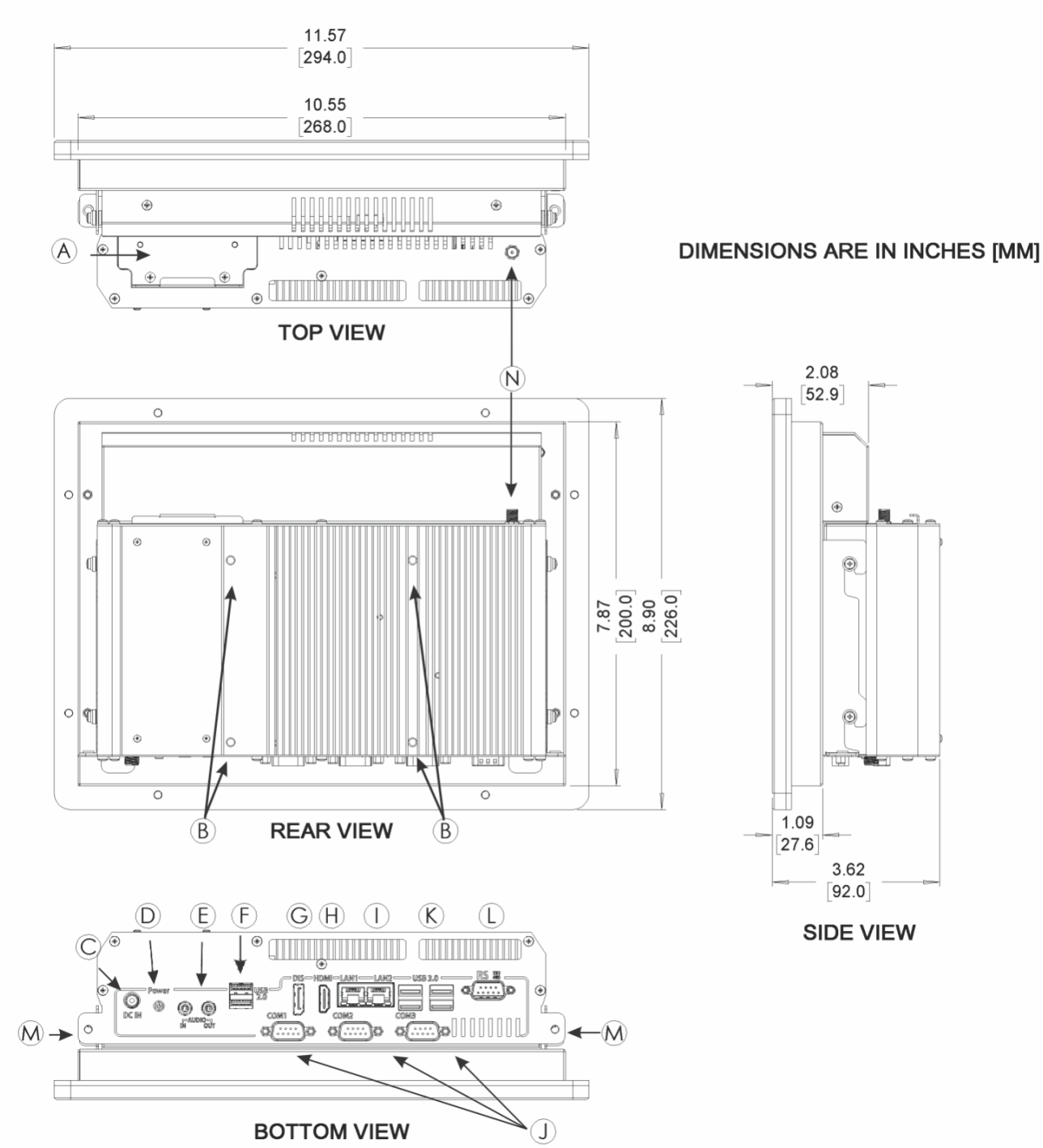

A	Solid State Drive Bay	**H**	HDMI® Output
B	VESA 100 x 100 mounting	**I**	Gigabit Ethernet Ports
C	DC Input Power Connector	**J**	COM Ports DE9P (RS232)
D	Illuminated Power Button	**K**	USB 3.0 Host Ports
E	3.5mm Audio Ports (Mic-In / Line Out)	**L**	COM Port DE9P (RS232/RS422/RS485 Configurable)
F	USB 2.0 Host Ports	**M**	Thumb-Screw Mounting
G	DisplayPort Output	**N**	Wi-Fi Antenna Connector (Nonfunctional unless Wi-Fi Option Purchased)

PC1312

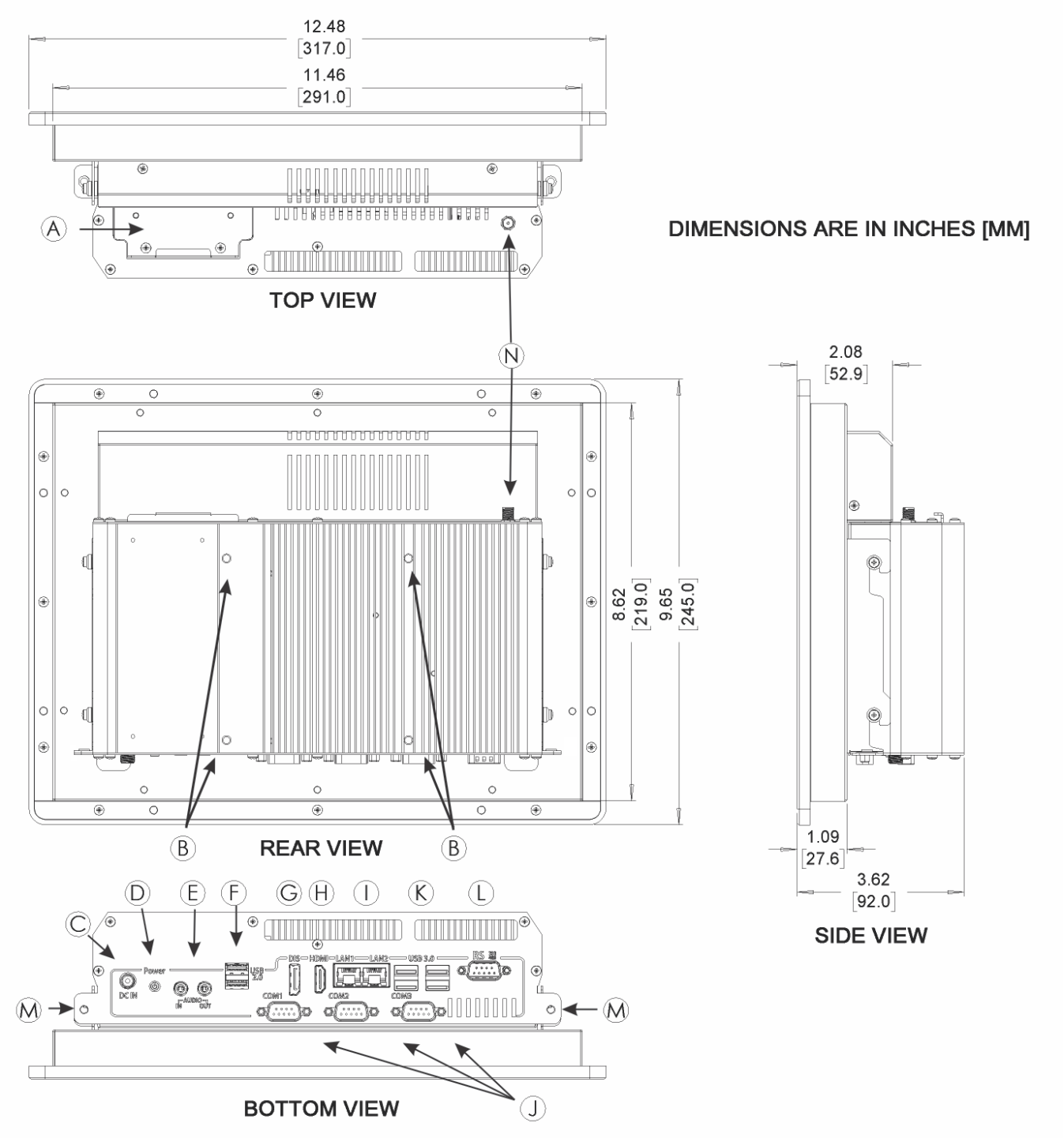

A	Solid State Drive Bay	**H**	HDMI® Output
B	VESA 100 x 100 mounting	**I**	Gigabit Ethernet Ports
C	DC Input Power Connector	**J**	COM Ports DE9P (RS232)
D	Illuminated Power Button	**K**	USB 3.0 Host Ports
E	3.5mm Audio Ports (Mic-In / Line Out)	**L**	COM Port DE9P (RS232/RS422/RS485 Configurable)
F	USB 2.0 Host Ports	**M**	Thumb-Screw Mounting
G	DisplayPort Output	**N**	Wi-Fi Antenna Connector (Nonfunctional unless Wi-Fi Option Purchased)

PC1315

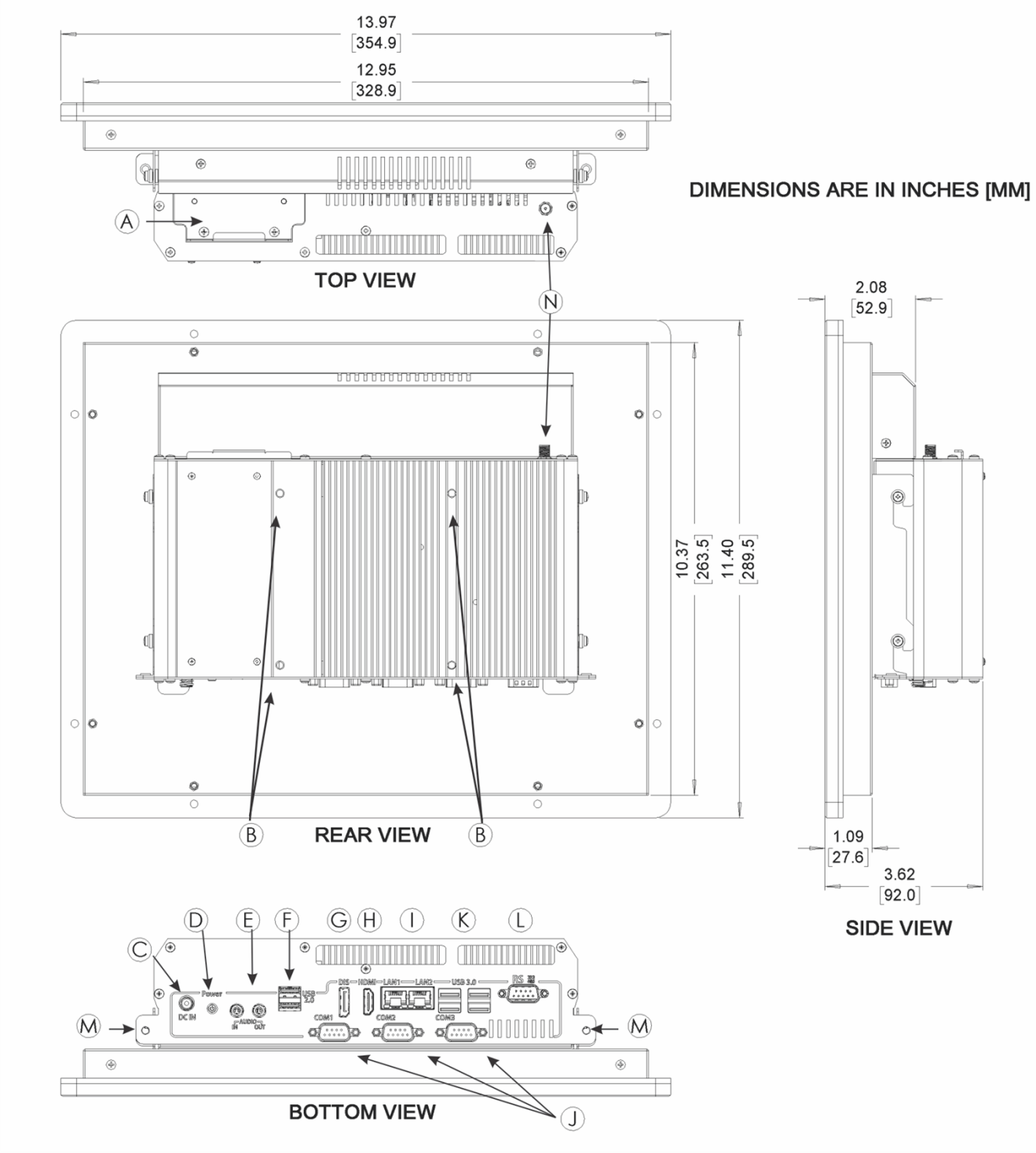

A	Solid State Drive Bay	**H**	HDMI® Output
B	VESA 100 x 100 mounting	**I**	Gigabit Ethernet Ports
C	DC Input Power Connector	**J**	COM Ports DE9P (RS232)
D	Illuminated Power Button	**K**	USB 3.0 Host Ports
E	3.5mm Audio Ports (Mic-In / Line Out)	**L**	COM Port DE9P (RS232/RS422/RS485 Configurable)
F	USB 2.0 Host Ports	**M**	Thumb-Screw Mounting
G	DisplayPort Output	**N**	Wi-Fi Antenna Connector (Nonfunctional unless Wi-Fi Option Purchased)

PC1316

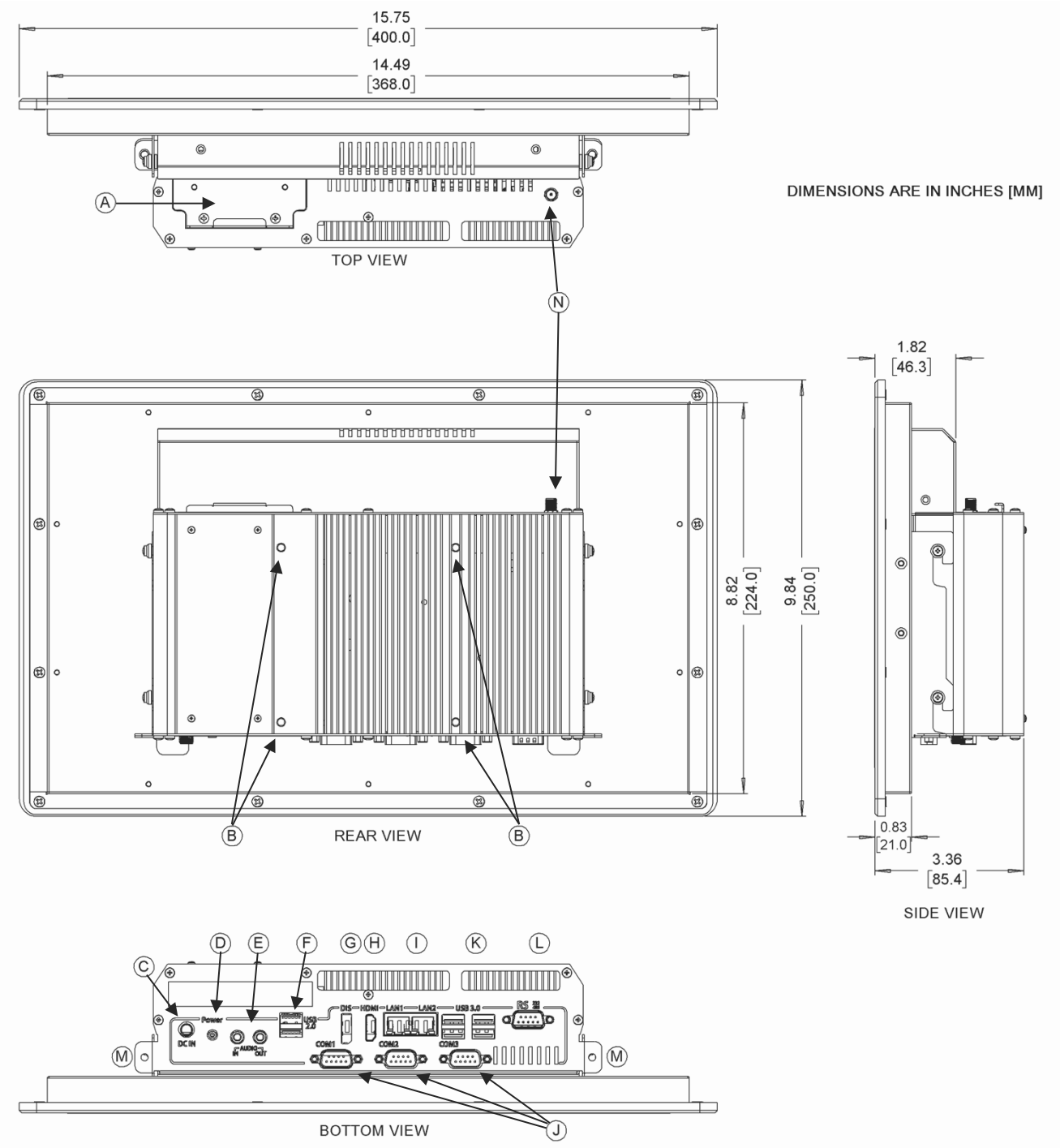

A	Solid State Drive Bay	**H**	HDMI® Output
B	VESA 100 x 100 mounting	**I**	Gigabit Ethernet Ports
C	DC Input Power Connector	**J**	COM Ports DE9P (RS232)
D	Illuminated Power Button	**K**	USB 3.0 Host Ports
E	3.5mm Audio Ports (Mic-In / Line Out)	**L**	COM Port DE9P (RS232/RS422/RS485 Configurable)
F	USB 2.0 Host Ports	**M**	Thumb-Screw Mounting
G	DisplayPort Output	**N**	Wi-Fi Antenna Connector (Nonfunctional unless Wi-Fi Option Purchased)

PC1317

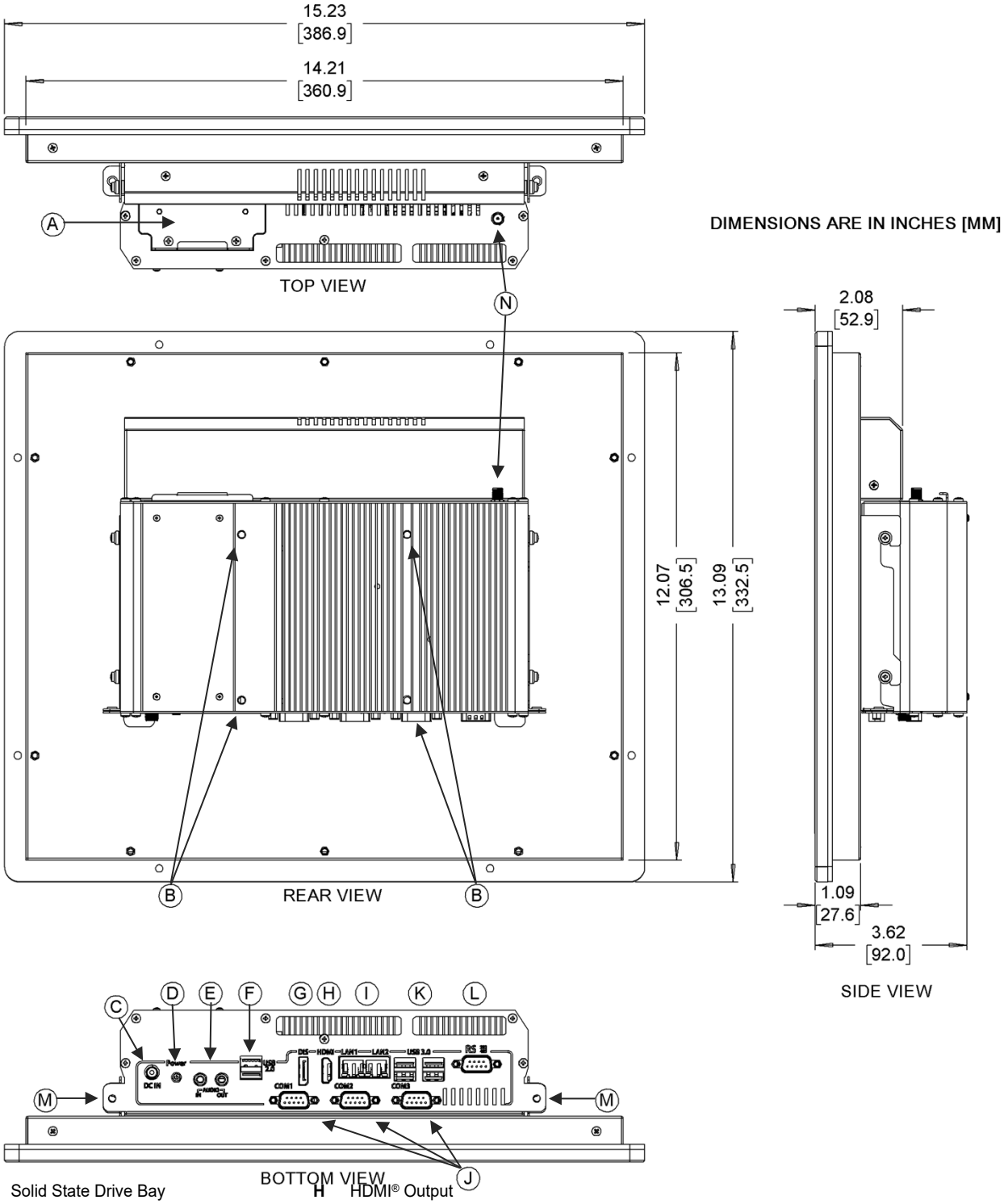

A	Solid State Drive Bay	**H**	HDMI® Output
B	VESA 100 x 100 mounting	**I**	Gigabit Ethernet Ports
C	DC Input Power Connector	**J**	COM Ports DE9P (RS232)
D	Illuminated Power Button	**K**	USB 3.0 Host Ports
E	3.5mm Audio Ports (Mic-In / Line Out)	**L**	COM Port DE9P (RS232/RS422/RS485 Configurable)
F	USB 2.0 Host Ports	**M**	Thumb-Screw Mounting
G	DisplayPort Output	**N**	Wi-Fi Antenna Connector (Nonfunctional unless Wi-Fi Option Purchased)

PC1319

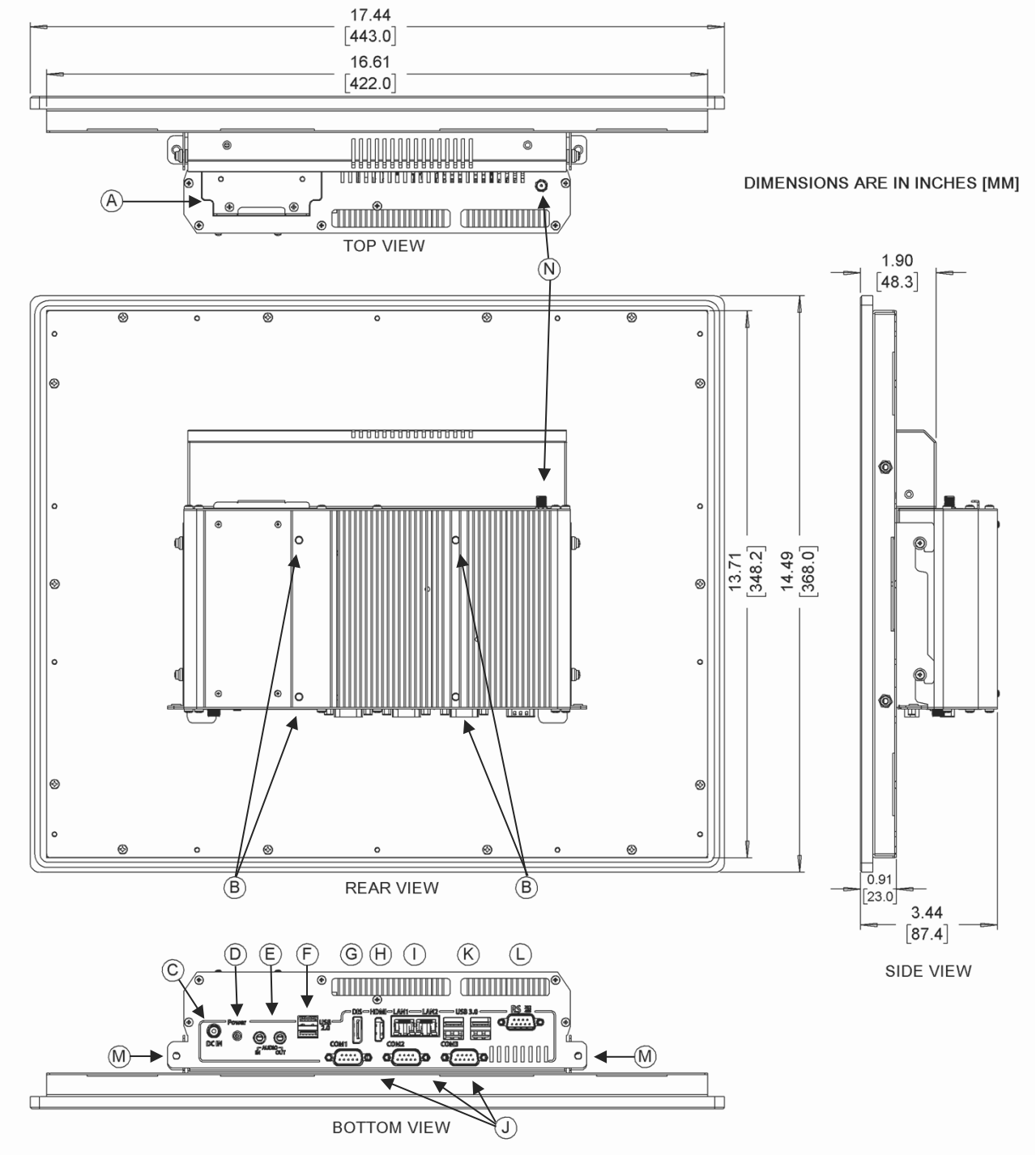

A	Solid State Drive Bay	**H**	HDMI® Output
B	VESA 100 x 100 mounting	**I**	Gigabit Ethernet Ports
C	DC Input Power Connector	**J**	COM Ports DE9P (RS232)
D	Illuminated Power Button	**K**	USB 3.0 Host Ports
E	3.5mm Audio Ports (Mic-In / Line Out)	**L**	COM Port DE9P (RS232/RS422/RS485 Configurable)
F	USB 2.0 Host Ports	**M**	Thumb-Screw Mounting
G	DisplayPort Output	**N**	Wi-Fi Antenna Connector (Nonfunctional unless Wi-Fi Option Purchased)

PC1321

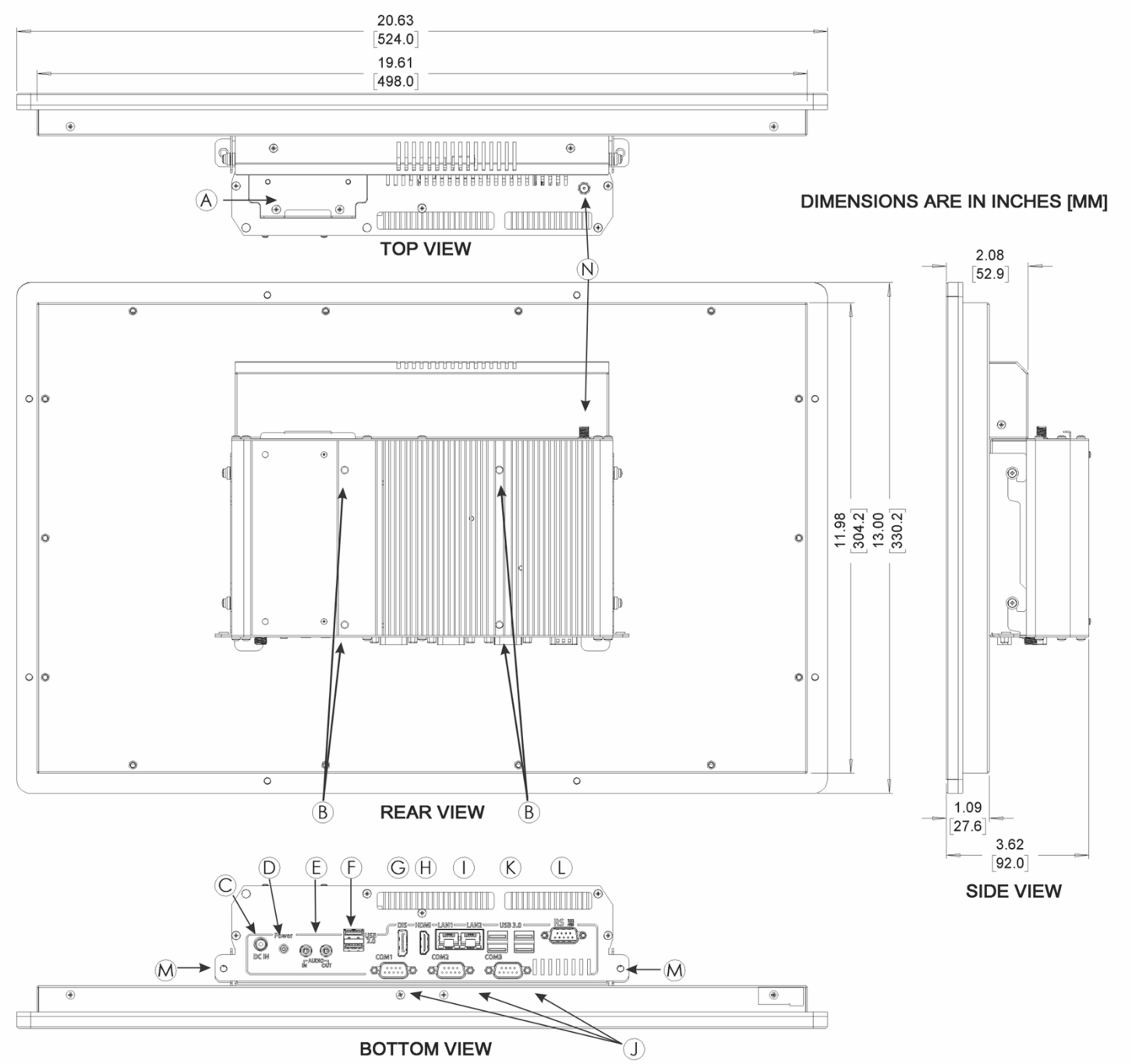

A	Solid State Drive Bay	**H**	HDMI® Output
B	VESA 100 x 100 mounting	**I**	Gigabit Ethernet Ports
C	DC Input Power Connector	**J**	COM Ports DE9P (RS232)
D	Illuminated Power Button	**K**	USB 3.0 Host Ports
E	3.5mm Audio Ports (Mic-In / Line Out)	**L**	COM Port DE9P (RS232/RS422/RS485 Configurable)
F	USB 2.0 Host Ports	**M**	Thumb-Screw Mounting
G	DisplayPort Output	**N**	Wi-Fi Antenna Connector (Non-functional unless Wi-Fi Option Purchased)

PC1327

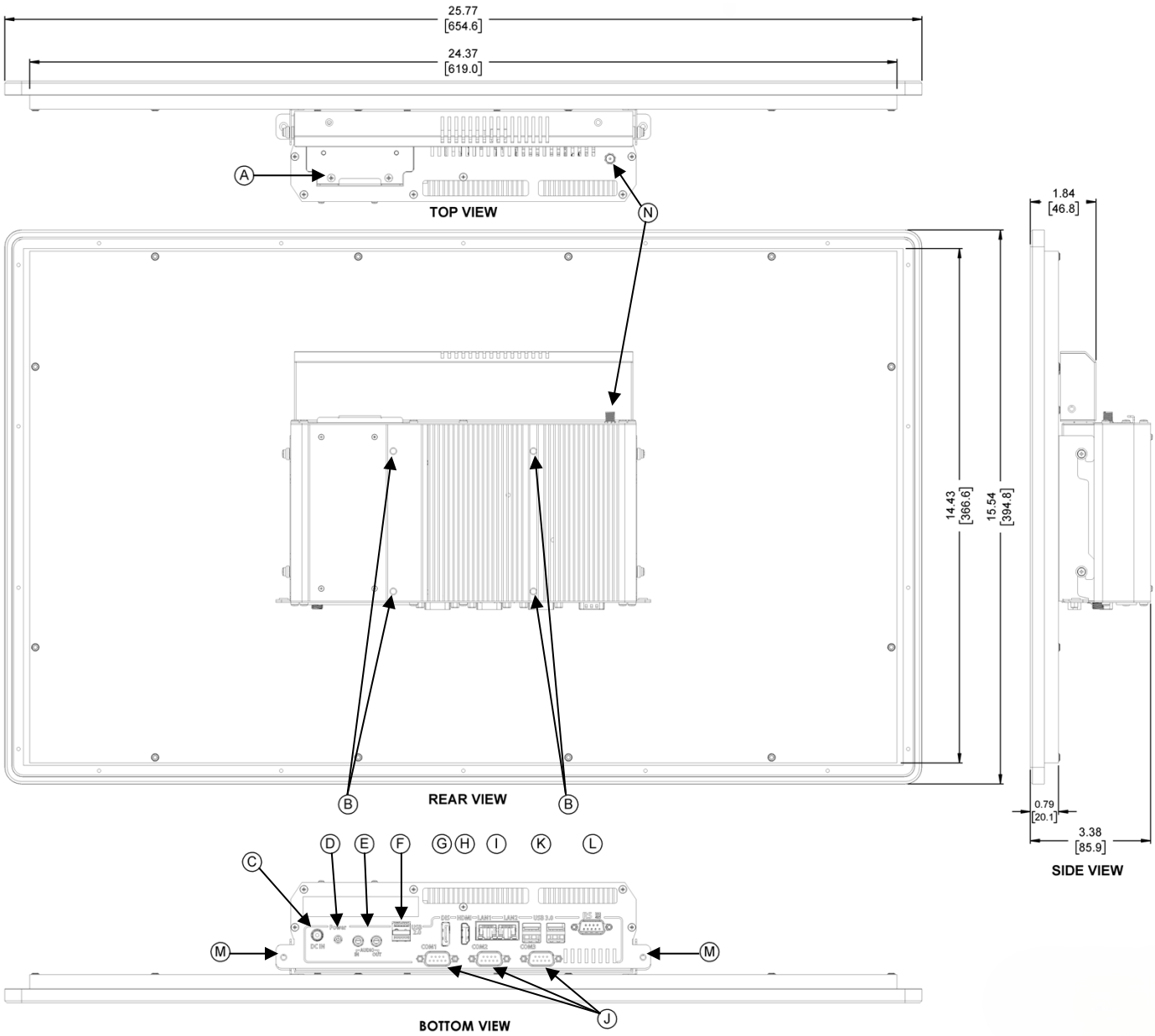

A	Solid State Drive Bay	**H**	HDMI® Output
B	VESA 100 x 100 mounting	**I**	Gigabit Ethernet Ports
C	DC Input Power Connector	**J**	COM Ports DE9P (RS232)
D	Illuminated Power Button	**K**	USB 3.0 Host Ports
E	3.5mm Audio Ports (Mic-In / Line Out)	**L**	COM Port DE9P (RS232/RS422/RS485 Configurable)
F	USB 2.0 Host Ports	**M**	Thumb-Screw Mounting
G	DisplayPort Output	**N**	Wi-Fi Antenna Connector (Non-functional unless Wi-Fi Option Purchased)

Why Buy A Maple Industrial PC

In addition to our powerful and affordable hardware, we'll also continue to support your company long after a sale. Wide product selection, large in-stock inventory, outstanding product warranty, free technical support and software, and in-house repairs with quick turnaround times, Maple Systems has your business covered.

Customize To Meet Your Needs

Companies have chosen Maple Systems solutions over Allen-Bradley, Omron, Siemens, Panasonic, and so many others, in hundreds of applications, in every industry, and in every type of organization. Our Industrial PCs are designed to resolve your toughest automation challenges in manufacturing, processing, and fabrication environments, and because we offer thousands of different configurations, designing your IPC to meet your unique requirements is easy.

All our Industrial PCs are ideal for applications in industrial automation, healthcare, manufacturing, oil & gas, packaging, building automation, water, energy, agriculture, food & beverage, and more. Our offerings include high brightness/sunlight readable displays, extended temperature IPCs, stainless steel enclosures, and Class I, Div 2 certified IPCs. Learn more about the industries we serve and discover why more and more companies are choosing Maple Systems.

Supports Your 3rd Party Software

Since our Industrial PCs can be configured with either a Windows™ or Linux™ Operating System, adding your own software is easy. Don't be tied to expensive industrial computers or HMIs just because of a name. Our IPCs support FactoryTalk®, Ignition SCADA®, Emerson Ovation®, Simatic SCADA®, Predator Touch HMI®, and hundreds of other HMI and SCADA software solutions.

We are a proud partner of Award-winning AVEVA™ Edge. This powerful HMI/SCADA software package enables you to create custom industrial control applications for your unique industry, putting you in the driver's seat of creating your industrial process. With easy-to-use commands/ tool bars and a Microsoft Windows® programming environment, AVEVA™ Edge's feature-rich application puts you in the driver's seat of creating your industrial process. Learn more about AVEVA Edge.

Build your SCADA

We offer all the components you need to create your own unique level of supervisory data acquisition and control, from the simplest stand-alone machine to sophisticated multi-device networked production line(s), all the way to enterprise-level operations and IIoT functionalities leveraging cloud connectivity.

Our products can help you standardize communications between devices, gluing different systems together for one source to your SCADA. No need to redesign your entire application. Keep the components that are already working for you, just add Maple Systems components to grow your abilities to supervise, control, and acquire data.

Application Story

Pharmaceutical Equipment

Adding a Maple Systems Stainless Steel Industrial Panel PC with Wi Fi to an existing machine saved this OEM time and money

This OEM manufacturer uses a Maple Systems Industrial Panel PC for their production-series tablet pressing machines. The rotary tablet press boasts features essential for successful mid-sized tableting without the full-scale price. This application required a cost effective 12" panel touch screen industrial PC with enough computing power for their custom software and reporting system. They also required the front bezel be stainless steel with a IP69K rating to meet washdown sanitization requirements. See how we support the Pharmaceutical and Medical Industry.

Case Study

Water / Wastewater Treatment

Our High Brightness Industrial Panel PC with Wi-Fi checked all the boxes for this System Integrator

During their large revamping of a utility control system, Aqua Sierra's customer North Tahoe Utilities needed a PC-based HMI to run a simple Wonderware SCADA project as an interface. The PC needed to allow 3rd party software logging and reporting tools for their utility management system. The control room facility is climate controlled with large windows and bright overhead lighting. The remote facility did not have Ethernet cabling out to the PC location, however there was a Wi-Fi router connection nearby. Read how we support the Water & Wastewater industry.

Application Story

Dairy / Agriculture Equipment

The Stainless Steel enclosure makes this Industrial Panel PC the right choice for the food and beverage industry

This customer is a leading OEM manufacturer of custom stainless steel processing equipment and a preferred provider of quality products and services to the cheese, dairy, food, beverage and other sanitary industries. The customer's dairy processing equipment required an IPC that operators can interface with while wearing gloves. Another major requirement is that the PC be IP69K washdown rated to endure the regular cleaning and disinfecting required; and for compliance and record keeping, the customer needed real time data logging and storage using a 3rd party historian application running on the PC. Read more about the Food & Beverage OEMs we support everyday.