# PC1200 Series

## 10.4” ~ 21.5” Fanless Panel PC with Intel® Pentium™ N4200 Processor

- High-Resolution Capacitive Touch Screen
- Multiple Memory and Storage Options Available
- Windows® 10 IoT, Linux® Ubuntu OS Options
- Optional Wi-Fi Upgrade
- Panel or VESA mount
- Integrate with AVEVA™ Edge Software

| | | | | | |
|---|---|---|---|---|---|
| System | CPU | Intel® Pentium™ Apollo Lake™ N4200 Quad-Core™ 1.1GHz CPU | | | |
| | System Memory Options | 1 x DDR3-L 204-pin SO-DIMM RAM (4, 8 GB) | | | |
| I/O Ports | USB | 2 x USB 2.0 type A<br>4 x USB 3.0 type A | | | |
| | Serial | 1 x RS-232/422/485 DE-9P, COM1 (default RS-232)<br>2 x RS-232 DE-9P, COM2/COM3 | | | |
| | Audio | 1 x 3.5 mm Mic In, 1 x 3.5 mm Line-out | | | |
| | LAN | 2 x GbE RJ-45 | | | |
| | Power | DC power input jack, thumbscrew secured. | | | |
| | Power Switch | 1 x Momentary Pushbutton with Integrated LED | | | |
| | External Display Connector | 1 x HDMI® 1.4a | | | |
| Storage | Solid State Drive Options | 1 x 2.5” SATA III, MLC (64, 128, 256, 512 GB, 1TB SSD) | | | |
| | SD Card Slot | N/A | | | |
| Expansion | Expansion Slot | Optional Wi-Fi kit (Wi-Fi card and antenna) | | | |
| Touch Screen | Type | Projected Capacitive Touch | | | |
| | Interface | USB | | | |
| Display | Display Type | 10.4”<br>TFT XGA LCD | 12.1”<br>TFT XGA LCD | 15”<br>TFT XGA LCD | 15.6” Widescreen<br>TFT FHD LCD |
| | Max. Resolution | 1024 x 768 | 1024 x 768 | 1024 x 768 | 1920 x 1080 |
| | Max. Color | 16.2 M | 16.2 M | 16.2 M | 16.2 M |
| | Luminance (cd/m²) | 350 | 500 | 300 | 450 |
| | View Angle (H°/V°) | 170/170 | 170/170 | 170/160 | 170/170 |
| | Contrast Ratio | 1000:1 | 700:1 | 2000:1 | 500:1 |
| | Backlight Lifetime (hours) | 50,000+ | 50,000+ | 50,000+ | 50,000+ |
| Electrical | Input Voltage | 12~24 VDC | 12~24 VDC | 12~24 VDC | 12~24 VDC |
| | Input Current | 0.88~1.75 A | 0.94~1.89 A | 1.0~2.0 A | 1.38~2.75 A |
| | Input Power | 21 W | 22.5 W | 24 W | 33 W |
| Mechanical | Dimension (W x H x D) | 11.57 x 8.90 x 2.82”<br>[294 x 226 x 71.6 mm] | 12.48 x 9.65 x 2.82”<br>[317 x 245 x 71.6 mm] | 13.97 x 11.40 x 2.82”<br>[354.9 x 289.5 x 71.6 mm] | 15.75 x 9.84 x 2.56”<br>[400 x 250 x 65 mm] |
| | Net Weight | 6.83 lbs [3.1 kg] | 7.28 lbs [3.3 kg] | 9.70 lbs [4.4 kg] | 9.70 lbs [4.4 kg] |
| | Panel Cutout Dimensions (W x H) | 10.63 x 7.95”<br>[270 x 202 mm] | 11.54 x 8.70”<br>[293 x 221 mm] | 13.03 x 10.47”<br>[331 x 266 mm] | 14.57 x 8.90”<br>[370 x 226 mm] |
| | Mounting | Panel mounting, VESA 100 x 100 | | | |
| | Construction | Black Steel Chassis, Aluminum Heatsink | | | |
| | Rating | IP65 compliant front panel, NEMA 4 when panel mounted | | | |
| Environmental | Operating Temperature | 32~122°F [0~50°C] | | | |
| | Storage Temperature | -22~175°F [-30~80°C] | | | |
| | Storage Humidity | 10 to 90% @ 40°C, non-condensing | | | |
| | Shock Resistance | 10G acceleration peak to peak, 11ms duration | | | |
| | Vibration Resistance | 5~17 Hz, 0.1” double amplitude peak to peak, 1.5G acceleration peak to peak | | | |
| | Certifications | CE / FCC Class B / RoHS | | | |
| Operating System | Microsoft Windows® Options | Microsoft Windows® 10 IoT Enterprise Embedded LTSC 64-bit (EPKEA)<br>Microsoft Windows® 10 IoT Enterprise LTSC 64-bit (PKEA) | | | |
| | Linux® Options | Linux® Ubuntu Desktop | | | |
| Notes | Specifications subject to change without notice | | | | |

# PC1200 Series

## 10.4” ~ 21.5” Fanless Panel PC with Intel® Pentium™ N4200 Processor

- High-Resolution Capacitive Touch Screen
- Multiple Memory and Storage Options Available
- Windows® 10 IoT, Linux® Ubuntu OS Options
- Optional Wi-Fi Upgrade
- Panel or VESA mount
- Integrate with AVEVA™ Edge Software

| | | | | | |
|---|---|---|---|---|---|
| System | CPU | Intel® Pentium™ Apollo Lake™ N4200 Quad-Core™ 1.1GHz CPU | | | |
| | System Memory Options | 1 x DDR3-L 204-pin SO-DIMM RAM (4, 8 GB) | | | |
| I/O Ports | USB | 2 x USB 2.0 type A<br>4 x USB 3.0 type A | | | |
| | Serial | 1 x RS-232/422/485 DE-9P, COM1 (default RS-232)<br>2 x RS-232 DE-9P, COM2/COM3 | | | |
| | Audio | 1 x 3.5 mm Mic In, 1 x 3.5 mm Line-out | | | |
| | LAN | 2 x GbE RJ-45 | | | |
| | Power | DC power input jack, thumbscrew secured. | | | |
| | Power Switch | 1 x Momentary Pushbutton with Integrated LED | | | |
| | External Display Connector | 1 x HDMI® 1.4a | | | |
| Storage | Solid State Drive Options | 1 x 2.5” SATA III, MLC (64, 128, 256, 512 GB, 1TB SSD) | | | |
| | SD Card Slot | N/A | | | |
| Expansion | Expansion Slot | Optional Wi-Fi kit (Wi-Fi card and antenna) | | | |
| Touch Screen | Type | Projected Capacitive Touch | | | |
| | Interface | USB | | | |
| Display | Display Type | **17” TFT SXGA LCD** | **19” TFT SXGA LCD** | **21.5” Widescreen TFT FHD LCD** | **27” TFT XVGA LCD** |
| | Max. Resolution | 1280 x 1024 | 1280 x 1024 | 1920 x 1080 | 1920 x 1080 |
| | Max. Color | 16.2 M | 16.2 M | 16.2 M | 16.2 M |
| | Luminance (cd/m²) | 250 | 350 | 250 | 300 |
| | View Angle (H°/V°) | 160/160 | 170/160 | 170/160 | 178/178 |
| | Contrast Ratio | 1000:1 | 1000:1 | 3000:1 | 1000:1 |
| | Backlight Lifetime (hours) | 50,000+ | 30,000+ | 50,000+ | 30,000+ |
| Electrical | Input Voltage | 12~24 VDC | 12~24 VDC | 12~24 VDC | 12~24 VDC |
| | Input Current | 1.15~2.29 A | 1.19~2.38 A | 1.46~2.92 A | 1.7~3.4 A |
| | Input Power | 27.5 W | 28.5 W | 35 W | 40.8 W |
| Mechanical | Dimension (W x H x D) | 15.23 x 13.09 x 2.82”<br>[386.9 x 332.5 x 71.6 mm] | 17.44 x 14.49 x 2.65”<br>[443 x 368 x 67.3 mm] | 20.63 x 13.00 x 2.82”<br>[524 x 330.2 x 71.6 mm] | 25.77 x 15.54 x 2.58”<br>[654.6 x 394.8 x 65.5 mm] |
| | Net Weight | 10.58 lbs [4.8 kg] | 15.65 lbs [7.1 kg] | 15.87 lbs [7.2 kg] | 19.25 lbs [8.73 kg] |
| | Panel Cutout Dimensions (W x H) | 14.29 x 12.17”<br>[363 x 309 mm] | 16.69 x 13.82”<br>[424 x 351 mm] | 19.69 x 12.09”<br>[500 x 307 mm] | 24.69 x 14.45”<br>[627 x 367 mm] |
| | Mounting | Panel mounting, VESA 100 x 100 | | | |
| | Construction | Black Steel Chassis, Aluminum Heatsink | | | |
| | Rating | IP65 compliant front panel, NEMA 4 when panel mounted | | | |
| Environmental | Operating Temperature | 32~122°F [0~50°C] | | | |
| | Storage Temperature | -22~175°F [-30~80°C] | | | |
| | Storage Humidity | 10 to 90% @ 40°C, non-condensing | | | |
| | Shock Resistance | 10G acceleration peak to peak, 11ms duration | | | |
| | Vibration Resistance | 5~17 Hz, 0.1” double amplitude peak to peak, 1.5G acceleration peak to peak | | | |
| | Certifications | CE / FCC Class B / RoHS | | | |
| Operating System | Microsoft Windows® Options | Microsoft Windows® 10 IoT Enterprise Embedded LTSC 64-bit (EPKEA)<br>Microsoft Windows® 10 IoT Enterprise LTSC 64-bit (PKEA) | | | |
| | Linux® Options | Linux® Ubuntu Desktop | | | |
| Notes | Specifications subject to change without notice | | | | |

## PC1210A

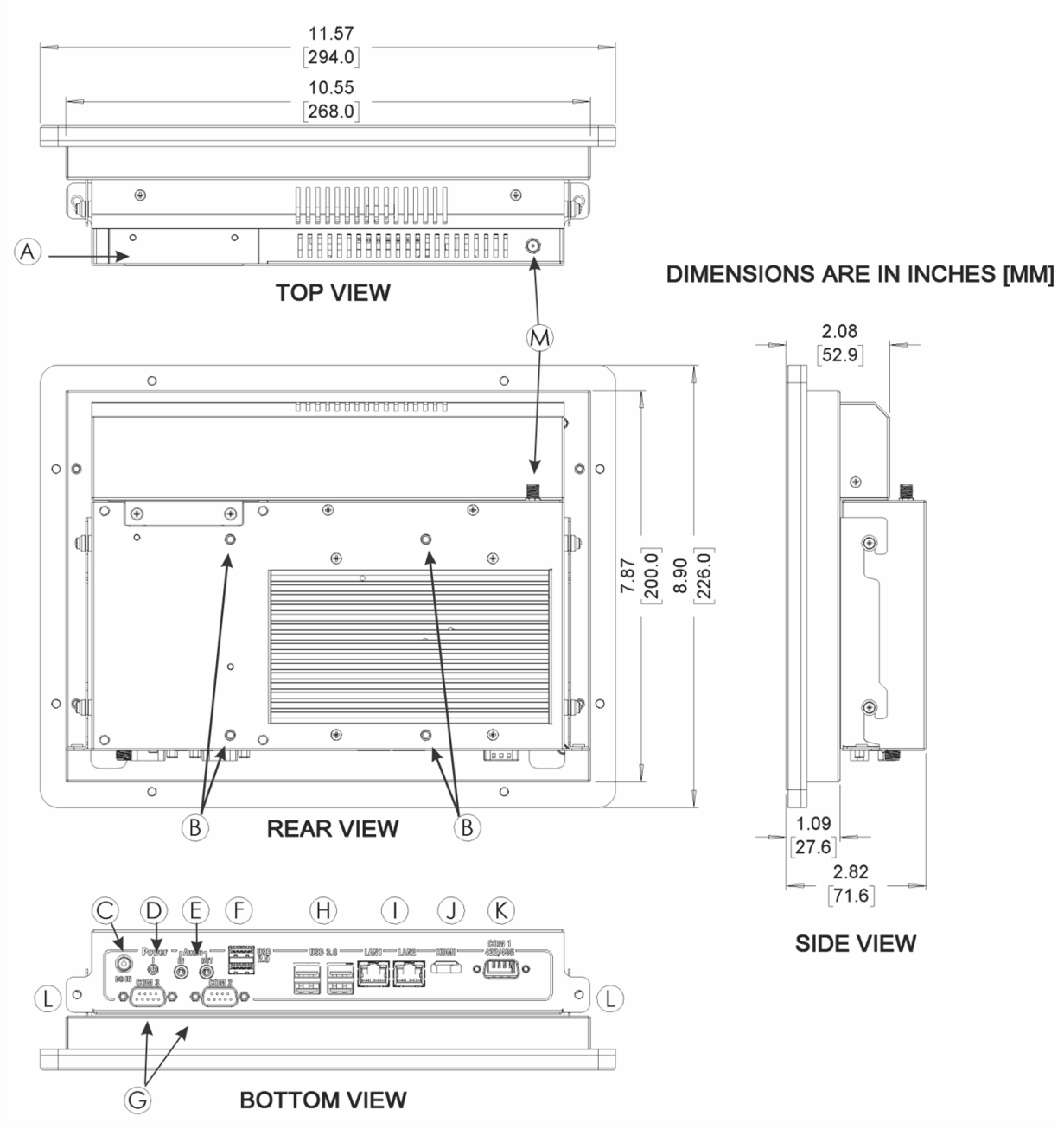


| | | | |
|---|---|---|---|
| A | Solid State Drive Bay | H | USB 3.0 Host Ports |
| B | VESA 100 x 100 mounting | I | Gigabit Ethernet Ports |
| C | DC Input Power Connector | J | HDMI® Output |
| D | Illuminated Power Button | K | COM Port DE9P (RS232/RS422/RS485 Configurable) |
| E | 3.5mm Audio Ports (Mic-In / Line Out) | L | Thumb-Screw Mounting |
| F | USB 2.0 Host Ports | M | Wi-Fi Antenna Connector (Nonfunctional unless Wi-Fi Option Purchased) |
| G | COM Ports DE9P (RS232) | | |

## PC1212A

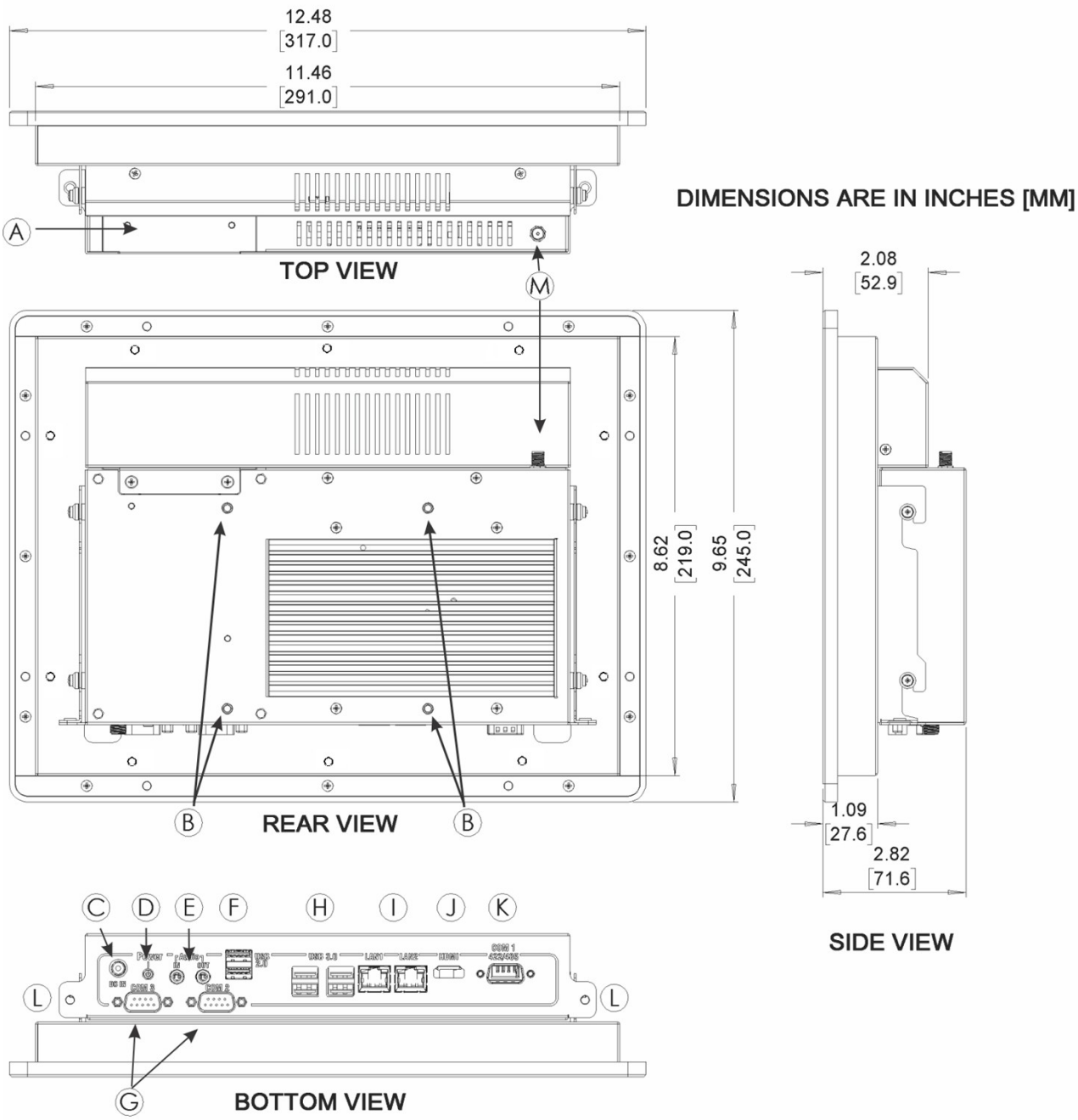


| | | | |
|---|---|---|---|
| A | Solid State Drive Bay | H | USB 3.0 Host Ports |
| B | VESA 100 x 100 mounting | I | Gigabit Ethernet Ports |
| C | DC Input Power Connector | J | HDMI® Output |
| D | Illuminated Power Button | K | COM Port DE9P (RS232/RS422/RS485 Configurable) |
| E | 3.5mm Audio Ports (Mic-In / Line Out) | L | Thumb-Screw Mounting |
| F | USB 2.0 Host Ports | M | Wi-Fi Antenna Connector (Nonfunctional unless Wi-Fi Option Purchased) |
| G | COM Ports DE9P (RS232) | | |

## PC1215A

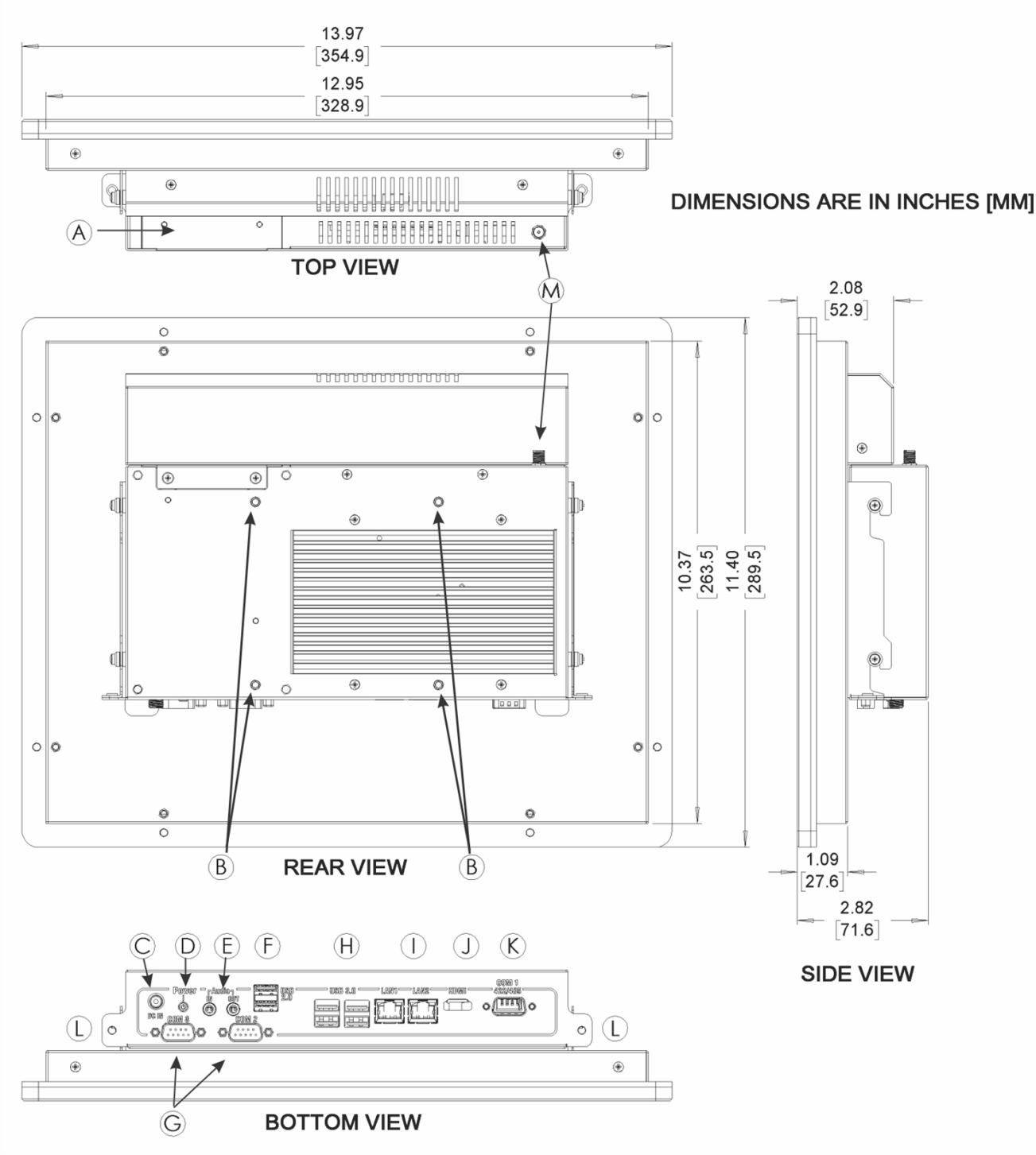


| | | | |
|---|---|---|---|
| A | Solid State Drive Bay | H | USB 3.0 Host Ports |
| B | VESA 100 x 100 mounting | I | Gigabit Ethernet Ports |
| C | DC Input Power Connector | J | HDMI® Output |
| D | Illuminated Power Button | K | COM Port DE9P (RS232/RS422/RS485 Configurable) |
| E | 3.5mm Audio Ports (Mic-In / Line Out) | L | Thumb-Screw Mounting |
| F | USB 2.0 Host Ports | M | Wi-Fi Antenna Connector (Nonfunctional unless Wi-Fi Option Purchased) |
| G | COM Ports DE9P (RS232) | | |

## PC1216A

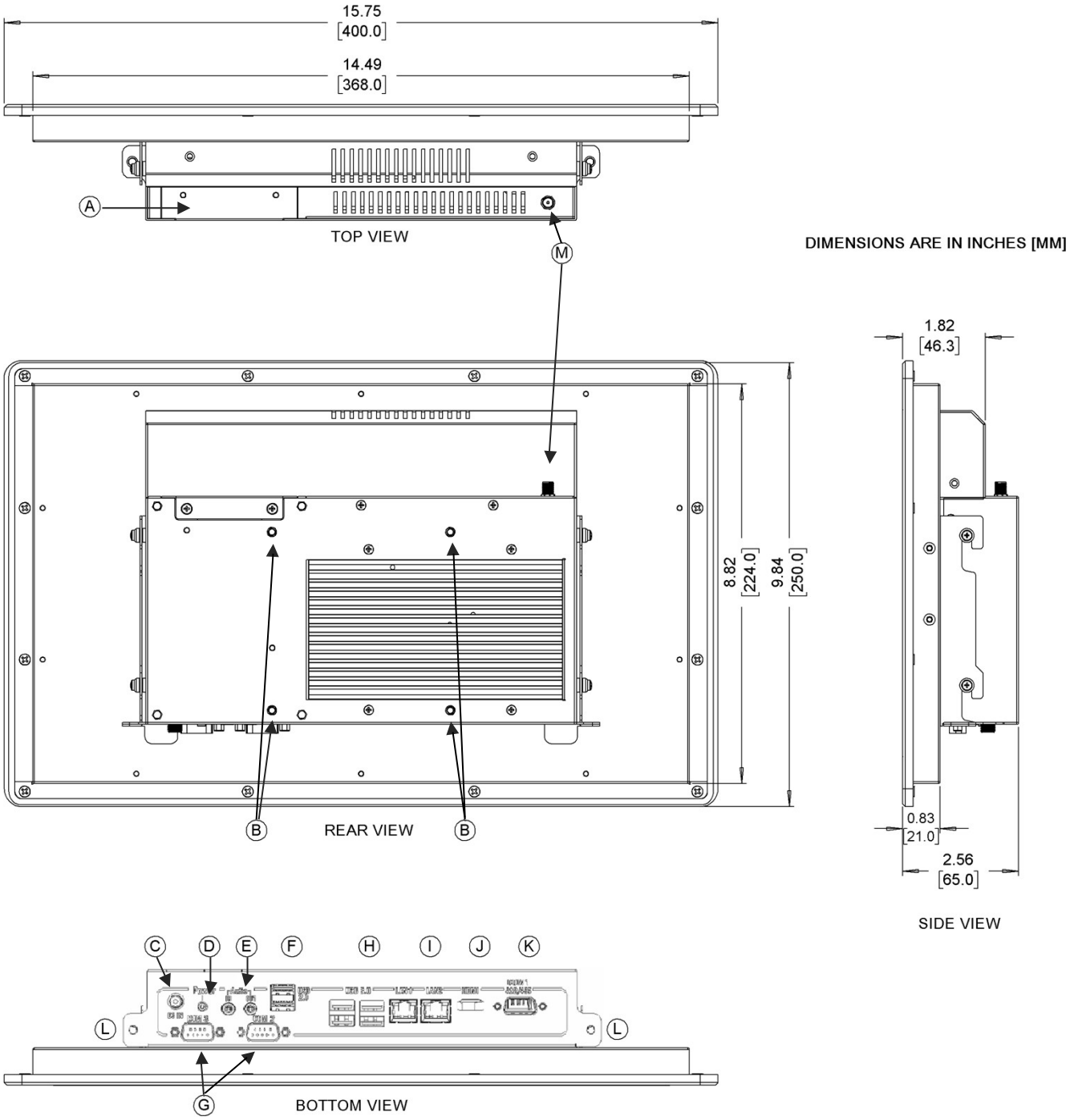


| | | | |
|---|---|---|---|
| A | Solid State Drive Bay | H | USB 3.0 Host Ports |
| B | VESA 100 x 100 mounting | I | Gigabit Ethernet Ports |
| C | DC Input Power Connector | J | HDMI® Output |
| D | Illuminated Power Button | K | COM Port DE9P (RS232/RS422/RS485 Configurable) |
| E | 3.5mm Audio Ports (Mic-In / Line Out) | L | Thumb-Screw Mounting |
| F | USB 2.0 Host Ports | M | Wi-Fi Antenna Connector (Nonfunctional unless Wi-Fi Option Purchased) |
| G | COM Ports DE9P (RS232) | | |

## PC1217A

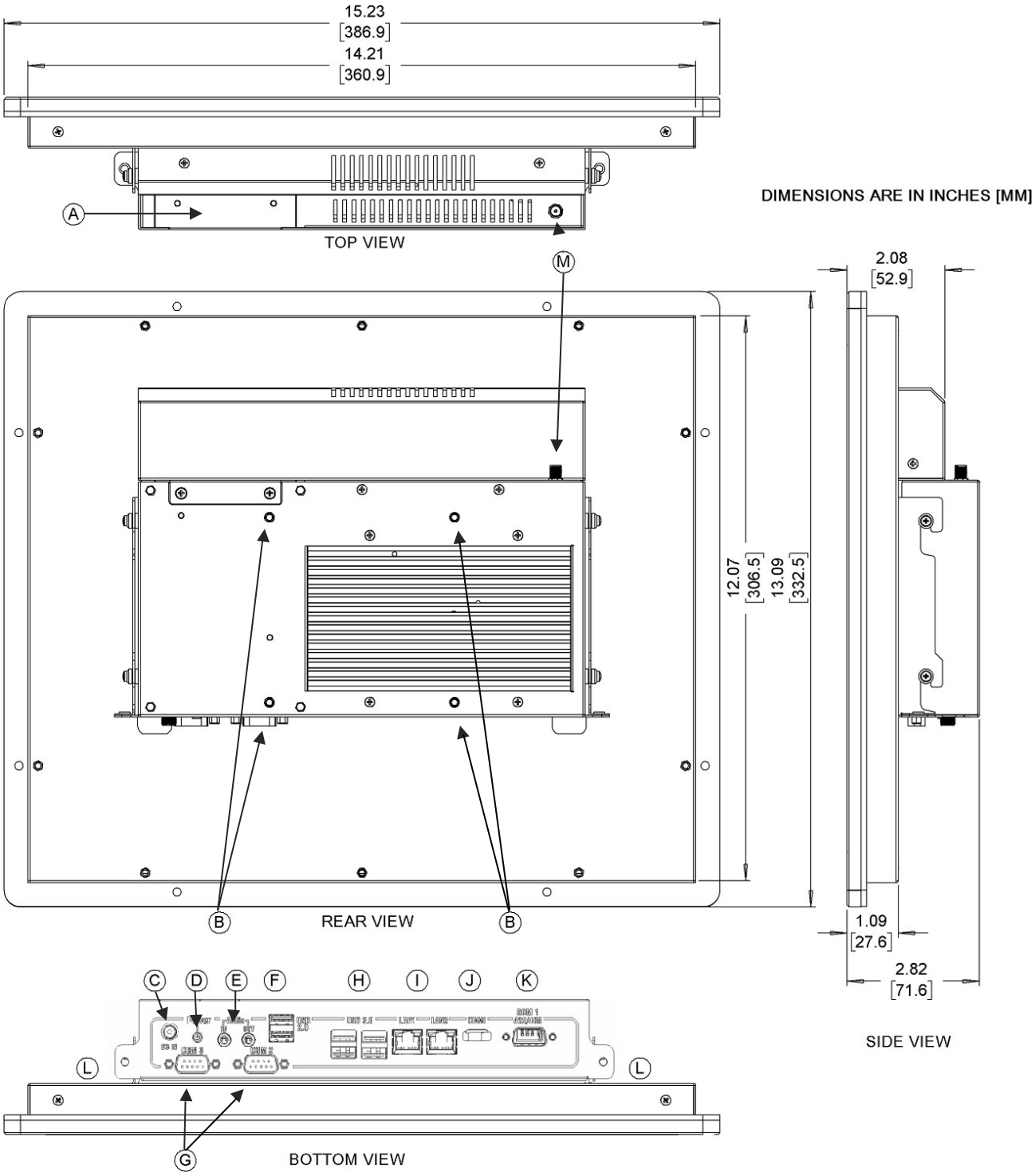


| | | | |
|---|---|---|---|
| A | Solid State Drive Bay | H | USB 3.0 Host Ports |
| B | VESA 100 x 100 mounting | I | Gigabit Ethernet Ports |
| C | DC Input Power Connector | J | HDMI® Output |
| D | Illuminated Power Button | K | COM Port DE9P (RS232/RS422/RS485 Configurable) |
| E | 3.5mm Audio Ports (Mic-In / Line Out) | L | Thumb-Screw Mounting |
| F | USB 2.0 Host Ports | M | Wi-Fi Antenna Connector (Nonfunctional unless Wi-Fi Option Purchased) |
| G | COM Ports DE9P (RS232) | | |

## PC1219A

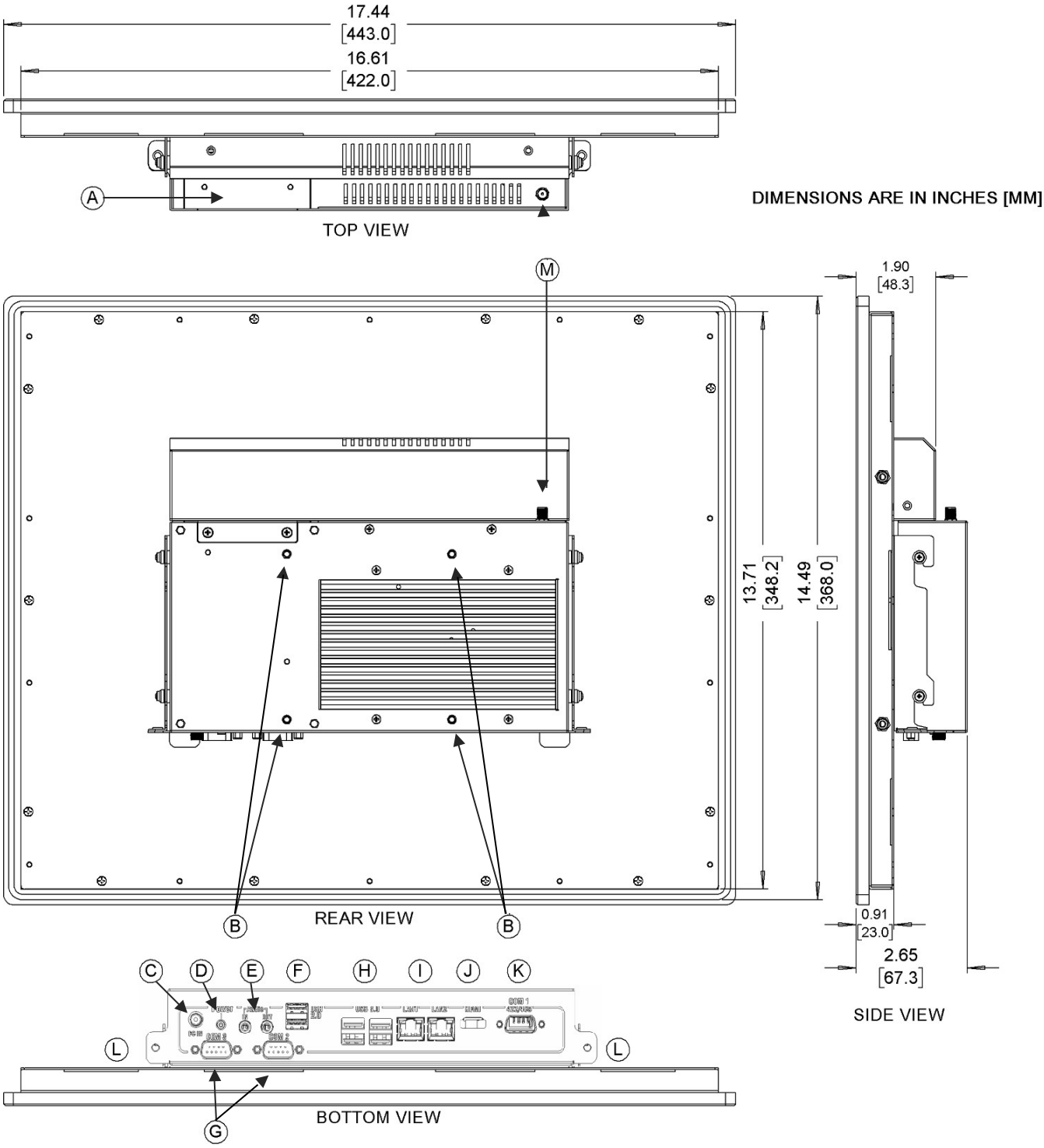


| | | | |
|---|---|---|---|
| A | Solid State Drive Bay | H | USB 3.0 Host Ports |
| B | VESA 100 x 100 mounting | I | Gigabit Ethernet Ports |
| C | DC Input Power Connector | J | HDMI® Output |
| D | Illuminated Power Button | K | COM Port DE9P (RS232/RS422/RS485 Configurable) |
| E | 3.5mm Audio Ports (Mic-In / Line Out) | L | Thumb-Screw Mounting |
| F | USB 2.0 Host Ports | M | Wi-Fi Antenna Connector (Nonfunctional unless Wi-Fi Option Purchased) |
| G | COM Ports DE9P (RS232) | | |

## PC1221A

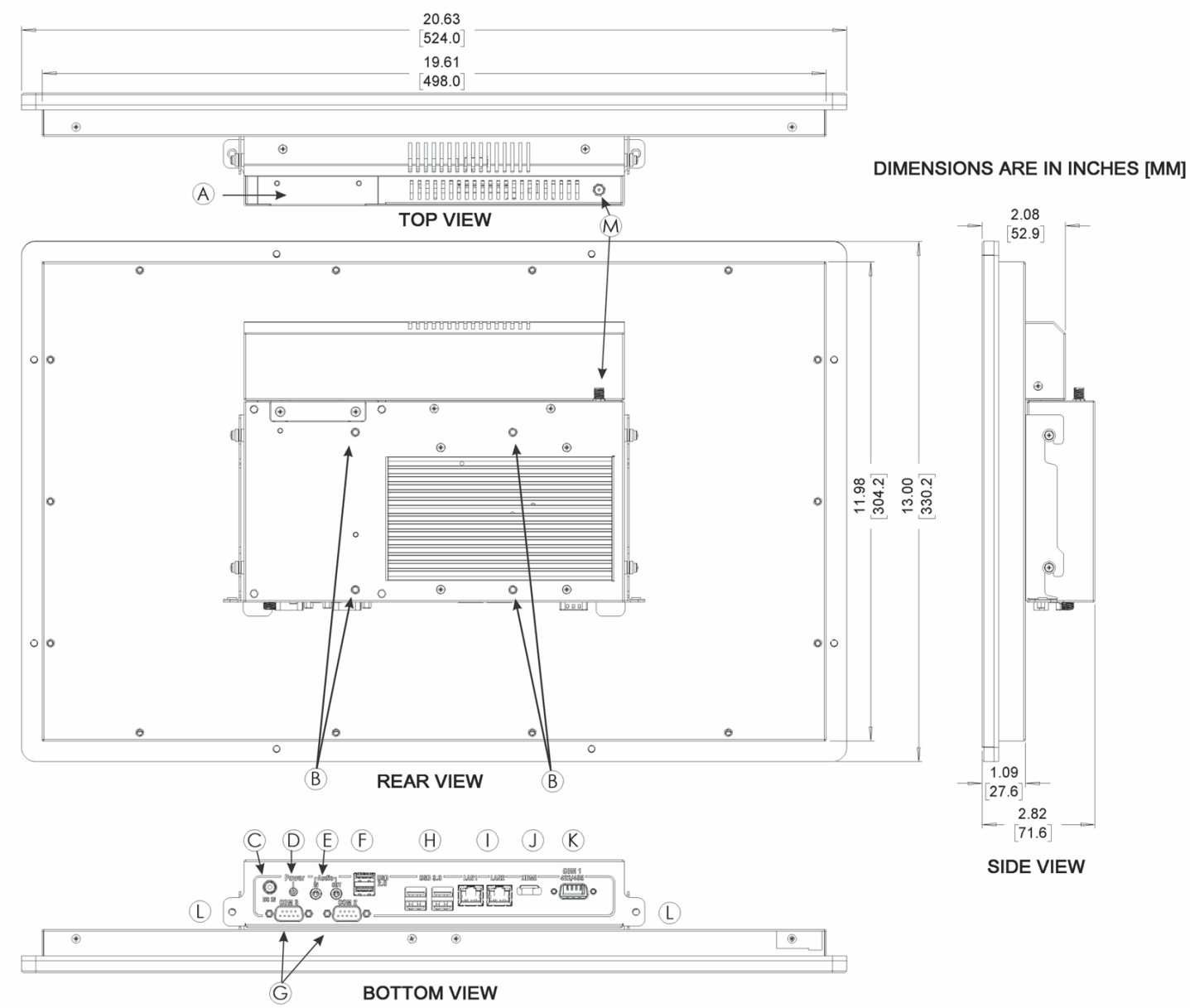


| | | | |
|---|---|---|---|
| A | Solid State Drive Bay | H | USB 3.0 Host Ports |
| B | VESA 100 x 100 mounting | I | Gigabit Ethernet Ports |
| C | DC Input Power Connector | J | HDMI® Output |
| D | Illuminated Power Button | K | COM Port DE9P (RS232/RS422/RS485 Configurable) |
| E | 3.5mm Audio Ports (Mic-In / Line Out) | L | Thumb-Screw Mounting |
| F | USB 2.0 Host Ports | M | Wi-Fi Antenna Connector (Nonfunctional unless Wi-Fi Option Purchased) |
| G | COM Ports DE9P (RS232) | | |

## PC1227A

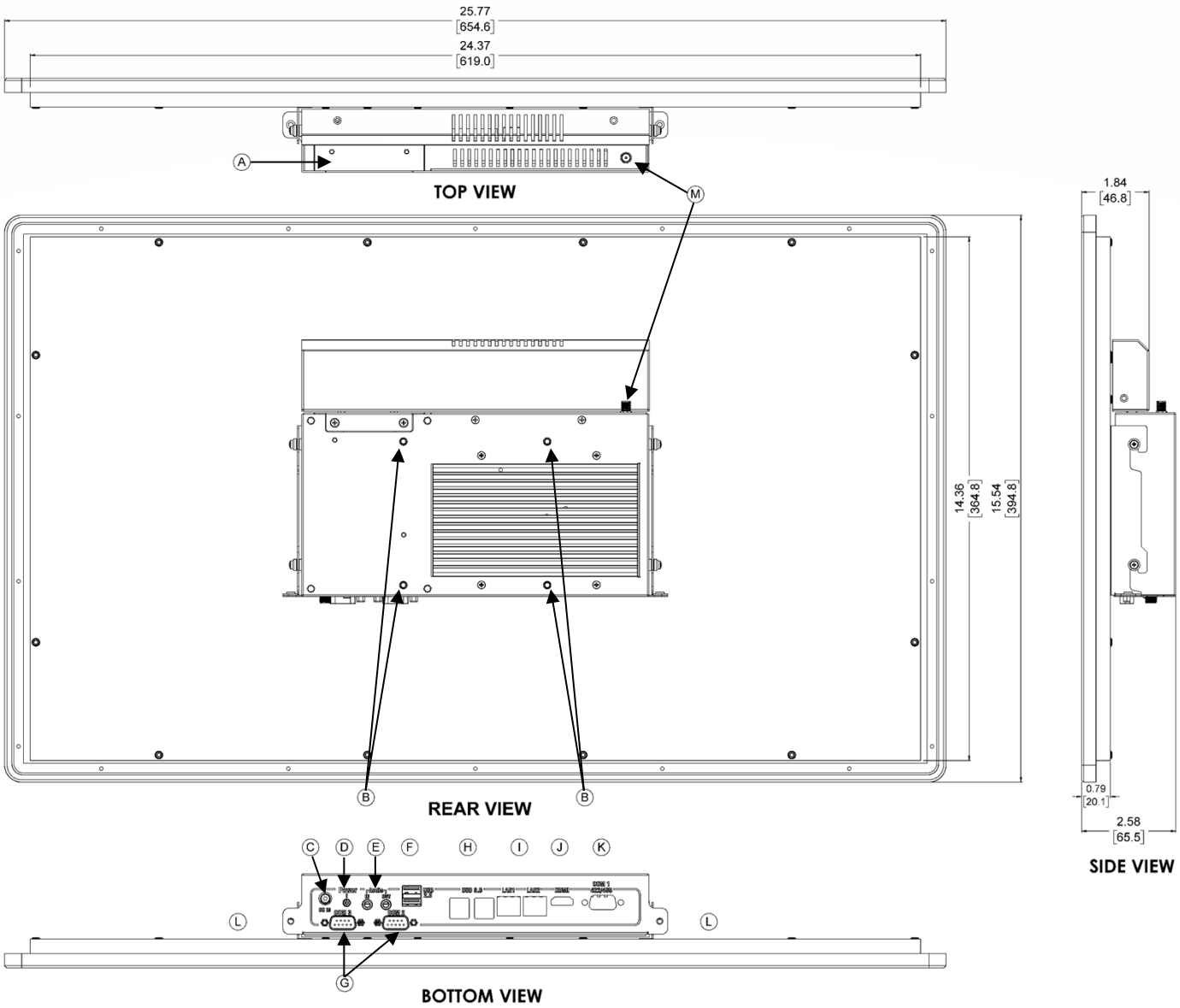


| | | | |
|---|---|---|---|
| A | Solid State Drive Bay | H | USB 3.0 Host Ports |
| B | VESA 100 x 100 mounting | I | Gigabit Ethernet Ports |
| C | DC Input Power Connector | J | HDMI® Output |
| D | Illuminated Power Button | K | COM Port DE9P (RS232/RS422/RS485 Configurable) |
| E | 3.5mm Audio Ports (Mic-In / Line Out) | L | Thumb-Screw Mounting |
| F | USB 2.0 Host Ports | M | Wi-Fi Antenna Connector (Nonfunctional unless Wi-Fi Option Purchased) |
| G | COM Ports DE9P (RS232) | | |

# Why Buy A Maple Industrial PC

In addition to our powerful and affordable hardware, we'll also continue to support your company long after a sale. Wide product selection, large in-stock inventory, outstanding product warranty, free technical support and software, and in-house repairs with quick turnaround times, Maple Systems has your business covered.

## Customize To Meet Your Needs

Companies have chosen Maple Systems solutions over Allen-Bradley, Omron, Siemens, Panasonic, and so many others, in hundreds of applications, in every industry, and in every type of organization. Our Industrial PCs are designed to resolve your toughest automation challenges in manufacturing, processing, and fabrication environments, and because we offer thousands of different configurations, designing your IPC to meet your unique requirements is easy.

All our Industrial PCs are ideal for applications in industrial automation, healthcare, manufacturing, oil & gas, packaging, building automation, water, energy, agriculture, food & beverage, and more. Our offerings include high brightness/sunlight readable displays, extended temperature IPCs, stainless steel enclosures, and Class I, Div 2 certified IPCs. Learn more about the industries we serve and discover why more and more companies are choosing Maple Systems.

## Supports Your 3rd Party Software

Since our Industrial PCs can be configured with either a Windows™ or Linux™ Operating System, adding your own software is easy. Don't be tied to expensive industrial computers or HMIs just because of a name. Our IPCs support FactoryTalk®, Ignition SCADA®, Emerson Ovation®, Simatic SCADA®, Predator Touch HMI®, and hundreds of other HMI and SCADA software solutions.

We are a proud partner of Award-winning AVEVA™ Edge. This powerful HMI/SCADA software package enables you to create custom industrial control applications for your unique industry, putting you in the driver's seat of creating your industrial process. With easy-to-use commands/ tool bars and a Microsoft Windows® programming environment, AVEVA™ Edge's feature-rich application puts you in the driver's seat of creating your industrial process. Learn more about AVEVA Edge.

## Build your SCADA

We offer all the components you need to create your own unique level of supervisory data acquisition and control, from the simplest stand-alone machine to sophisticated multi-device networked production line(s), all the way to enterprise-level operations and IIoT functionalities leveraging cloud connectivity.

Our products can help you standardize communications between devices, gluing different systems together for one source to your SCADA. No need to redesign your entire application. Keep the components that are already working for you, just add Maple Systems components to grow your abilities to supervise, control, and acquire data.

Application Story

## Pharmaceutical Equipment

**Adding a Maple Systems Stainless Steel Industrial Panel PC with Wi Fi to an existing machine saved this OEM time and money**

This OEM manufacturer uses a Maple Systems Industrial Panel PC for their production-series tablet pressing machines. The rotary tablet press boasts features essential for successful mid-sized tableting without the full-scale price. This application required a cost effective 12" panel touch screen industrial PC with enough computing power for their custom software and reporting system. They also required the front bezel be stainless steel with a IP69K rating to meet washdown sanitization requirements. See how we support the Pharmaceutical and Medical Industry.

Case Study

## Water / Wastewater Treatment

**Our High Brightness Industrial Panel PC with Wi-Fi checked all the boxes for this System Integrator**

During their large revamping of a utility control system, Aqua Sierra's customer North Tahoe Utilities needed a PC-based HMI to run a simple Wonderware SCADA project as an interface. The PC needed to allow 3rd party software logging and reporting tools for their utility management system. The control room facility is climate controlled with large windows and bright overhead lighting. The remote facility did not have Ethernet cabling out to the PC location, however there was a Wi-Fi router connection nearby. Read how we support the Water & Wastewater industry.

Application Story

## Dairy / Agriculture Equipment

**The Stainless Steel enclosure makes this Industrial Panel PC the right choice for the food and beverage industry**

This customer is a leading OEM manufacturer of custom stainless steel processing equipment and a preferred provider of quality products and services to the cheese, dairy, food, beverage and other sanitary industries. The customer's dairy processing equipment required an IPC that operators can interface with while wearing gloves. Another major requirement is that the PC be IP69K washdown rated to endure the regular cleaning and disinfecting required; and for compliance and record keeping, the customer needed real time data logging and storage using a 3rd party historian application running on the PC. Read more about the Food & Beverage OEMs we support everyday.